Wheeling Charge Under a Deregulated Environment

Wei-Jen Lee, *Senior Member, IEEE*, C. H. Lin, *Member, IEEE*, and Larry D. Swift, *Member, IEEE*

***Abstract*—Today's electric power industry is undergoing many fundamental changes due to the process of deregulation. Traditionally, electric power systems in many countries were structured in a single vertically integrated company for providing electric power to their customers based on cost of service. However, a number of countries have implemented or are implementing a free market deregulated industry in recent years. It is strongly believed that deregulation will have profound and important implications on technology within the electric power industry and the operation of industrial systems. Therefore, industrial sectors need to reevaluate potential impacts and strategies of operation under a deregulated environment. One of the most exciting opportunities for the customer is the implementation of wholesale and retail wheeling. With this change, customers will have the option to purchase services and energy from different sources. However, before exercising this right, one has to understand the possible costs and risks associated with this right. From the economic point of view, lower energy cost does not necessarily mean lower utility cost. The cost of wheeling charges and other factors have to be figured into the calculation. Since it is impossible to color the electron, there is no standard formula to calculate wheeling charges within the utility industry. This paper discusses several commonly used wheeling calculation methods used by utility companies. A numerical example is provided to illustrate the vector absolute mega-watt mile method that is used by the Electric Reliability Council of Texas.**

***Index Terms*—Deregulation, direct access, pool operation, vector absolute megawatt mile, wholesale and retail wheeling, wheeling charge.**

I. Introduction

OVER THE past few years, the electric power utility industry in North America and other countries has experienced a strong drive toward deregulation. Based on the experience of the deregulation of the communication, natural gas, and airline industries, people have considered the necessity of deregulating electric utilities to provide higher operation efficiency and lower energy costs.

After decades of government regulation and protection, the traditional vertical integrated electric utilities have been criticized as inefficient monopolies. Customers may pay expenses to utilities due to low-efficiency operation and improper policies. In order to take the challenge and maximize the opportunities of the deregulated industry, some fundamental changes have to take place in the utility industry.

True deregulation means fully open and free to competition. Only through competition can electric utilities provide the ultimate quality electricity and services, and reach the objectives of energy conservation. Another issue of competition is that each party needs to take the responsibility for its mistakes. In other words, the rights and obligations of each party will be clearly defined in the competitive environment. This will provide the incentives for electric utilities to make better investments and improve system operation [1], [2].

With regard to system operation methods, the direct access and pool structures are two major proposals for the competitive electric service market [3], [4]. The basic operating schemes of these two methods are listed below.

Direct Access Method

- Energy buyers would negotiate directly with energy suppliers.
- The consumer would be granted a choice through direct access by relying on direct principal-to-principal arrangements between buyers and sellers of electricity.

Pool Operation Method

- This creates a centralized market place (known as the "pool") that would match the demand for energy with available supply and develop a single market-clearing price.
- The pool purchases power from the generation companies or power plants and resells the power to the customers or distribution companies.
- The pool provides the competition through a wholesale power pool to lower rates for all consumers.

Generally speaking, the direct access method has more competition and provides better customer choice. Wheeling calculation, ancillary service requirements, and system security responsibility are the major issues for this operation method. Conversely, easier operation, elimination of the wheeling charge problem, and better resource usage are the advantages of the pool type. The pool structure offers less incentive to regulated transmission firms that carry the electricity to regulated local distribution firms. In the U.S. and other countries, a hybrid method is the most common approach for power delivery.

Deregulation is the most exciting event within the utility industry. With this change, customers have the option to purchase services and energy from different sources. However, lower energy cost does not necessarily mean lower utility cost. The cost of wheeling charges and other factors have to be figured into the calculation. Since it is impossible to color the electron, there is no standard formula to calculate wheeling charges within the utility industry. This paper discusses several commonly used

Paper ICPSD 00–08, presented at the 2000 IEEE/IAS Industrial and Commercial Power Systems Technical Conference, Clearwater Beach, FL, May 7–11, and approved for publication in the IEEE Transactions on Industry Applications by the Energy Systems Committee of the IEEE Industry Applications Society. Manuscript submitted for review May 12, 2000 and released for publication August 11, 2000.

W.-J. Lee and L. D. Swift are with the Energy Systems Research Center, University of Texas, Arlington, TX 76109 USA (e-mail: lee@exchange.uta.edu).

C. H. Lin was with the Energy Systems Research Center, University of Texas, Arlington, TX 76109 USA. He is now with the Department of Electrical Engineering, Kao Yuan Institute of Technology, Kaohsiung, Taiwan, R.O.C. (e-mail: chlin@cc.kyit.edu.tw).

Publisher Item Identifier S 0093-9994(01)00273-0.

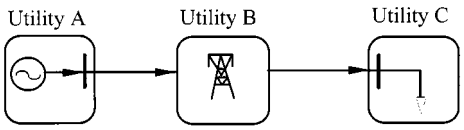

Fig. 1. Simple wheeling topology (utility B is the intermediate utility).

wheeling calculation methods used by utility companies. A numerical example is provided to illustrate the vector absolute megawatt mile (VAMM) method that is used by the Electric Reliability Council of Texas (ERCOT).

II. Wheeling Calculation Methods

Traditionally, wheeling has not been an important issue. The power moved from one utility to another utility as utilities interchanged power with neighboring utilities. Recently, trends in the electric power utility industry in North America and other countries have been toward increased unbundling of transmission services provided by utilities. Network access is a key requirement of a competitive market place. Network access tariffs have to be defined clearly for the involved parties to make correct economic and engineering decisions on upgrading and expanding their generation, transmission, and distribution facilities.

A. Power Wheeling

Wheeling has been defined in [5] as "the use of a utility's transmission facilities to transmit power for other buyers and sellers." For instance, utility C purchases power from utility A. A and C do not have direct interconnection, and Utility B is an intermediate utility between A and C. Therefore, the power sold from A to C must pass through B. It is said that power is *wheeled* through B. Such transactions are coordinated among the supplying side, the receiving end, and one or more intervening wheeling systems.

Power wheeling is accomplished by increasing generation in the supplying utility, utility A in this example, and reducing an equal amount of generation in the receiving system, utility C in this example. The result will change the power flow pattern of whole system, including those of the intermediate system, utility B.

A, C, or A and C should pay a wheeling charge for transmission access to compensate for the use of utility B's transmission system. The transmission system losses change as power wheeling takes place. The generation output of utility B is unchanged unless utility B agrees to accommodate the increased losses caused by the transaction. One option is that any increment of losses in the transmission system may be supplied by the supplying system or the receiving system by appropriate adjustment of interchange schedules. Fig. 1 illustrates the relation of the three utilities in the above example.

B. Categories of Transactions

There are several categories used to identify the type of a wheeling service as follows [6], [7].

1) *Firm Transmission Transactions:* These transactions are not subject to interruptions. A firm power wheeling is a so-called reserved transactions since it makes reservation of capacity on transmission facilities to meet transaction needs. A firm transmission transaction is the result of contractual agreements between the utility and the wheeling customers.
2) *Nonfirm Transmission Transactions:* These transactions may be curtailed or on an as-available basis. Any ongoing nonfirm transactions may be curtailed at the utility's discretion. As-available transactions are short term, mainly economy, transactions that take place when transmission capacity becomes available in specific areas of the system at specific times.
3) *Long-Term Transmission Transactions:* A long-term transaction takes place over a period spanning several years. The duration of a long-term transmission transaction is usually long enough to allow building new transmission facilities. Transmission service provided as part of long-term firm power sales is an example of a long-term transmission transaction. Long-term wheeling transactions are the result of contractual agreements between the utility and the wheeling customers.
4) *Short-Term Transmission Transactions:* A short-term transmission transaction may be as short as a few hours to as long as a year or two, and as such is not generally associated with transmission reinforcements. Short-term transactions may be provided under a bilateral contract or as part of a pooling arrangement.

C. Current Wheeling Charge Calculation Rules

Several wheeling charge calculation rules have been proposed in the literature. Reference [8] suggests that spot pricing can be used as a viable vehicle for defining wheeling costs. The concept underlying wheeling cost, using marginal cost pricing, and related extensive computations are in [9] and [10]. Reference [11] describes the MW-mile method of calculating the wheeling charge.

Among wheeling charge calculation rules, the embedded cost methods are used commonly throughout the utility industry. They recover the embedded capital costs and the average annual operating and maintenance costs of existing facilities from a particular wheeling transaction. Four commonly used embedded cost of wheeling methodologies are discussed in this section [8], [12].

1) Rolled-In-Embedded Method or Postage Stamp Method: The rolled-in method assumes that the entire transmission system is used in wheeling, irrespective of the actual transmission facilities that carry the transaction. The cost of wheeling as determined by this method is independent of the distance of the power transfer. This is the reason why the method is also called the postage stamp method. The embedded capital costs correspondingly reflect the entire transmission system. A simplified algorithm is listed as follows.

1) Calculate the annual fixed charge rate (AFCR), which is obtained from the company's cost data including long term debt, preferred stock, common equity, weighted

cost of capital per year, operating and maintenance costs, taxes, administrative and general expenses, and insurance.

2) Calculate the net plant cost (NP)

$$\text{NP} = \text{BC} - \text{DR}$$

where BC is the developed book cost for each line, and DR is the developed depreciation reserve for each line.

3) Calculate per-MW annual wheeling costs

$$\frac{\$}{\text{MW}} = \text{AFCR} * \sum_i \frac{\text{NP}_i}{i\ (\text{Peak Demand} + \text{Wheeling Increment})}$$

where i = transmission lines.

4) Calculate total annual wheeling costs

$$\frac{\$}{\text{Year}} = \frac{\$}{\text{MW}} * \text{ Wheeling Increment.}$$

2) Contract Path Method: The second traditional method, called the contract path method, is based upon the assumption that the power transfer is confined to flow along a specified electrically continuous path through the wheeling company's transmission system. Note that changes in flows in facilities that are not within the identified path are ignored. The embedded capital costs, correspondingly, are limited to those facilities that lie along the assumed path. The required wheeling cost computation is summarized as follows.

1) Determine lowest MW capability of facilities along specified path.
2) Calculate the AFCR and NP which are the same as in the postage stamp method.
3) Calculate the annual wheeling costs

$$\frac{\$}{\text{MW}} = \text{AFCR} * \sum_k \frac{\text{NP}_k}{(\text{MW of path})}$$

where k = the transmission lines in path.

4) Calculate the annual wheeling costs

$$\frac{\$}{\text{Year}} = \frac{\$}{\text{MW}} * \text{Wheeling Increment.}$$

3) Boundary Flow Methods: Boundary flow methods incorporate changes in MW boundary flows of the wheeling company due to a power transfer, either on a line basis or on a net interchange basis, into the cost of wheeling. Two power flows, executed successively for every year with and without the transaction, yield the changes in either individual boundary line or net interchange MW flows. The load level represented in the power flows can be at peak load or at other appropriate load levels.

This methodology is very close to that of the postage stamp method. The first three steps remain unchanged. The fourth step requires a change by replacing the wheeling increment by the sum of the absolute changes in either

1) all boundary line MW flows $(\frac{1}{2} * \Sigma_i\ |\Delta\ \text{MW}_i|)$ where i = boundary lines, or
2) net MW interchange flows $(\frac{1}{2} * \Sigma_k\ \Delta\ \text{Net Int}_k)$ where k = all net interchange.

Each interchange consists of a group of boundary lines that connect the wheeling company with one specific neighboring company.

Note that the two sums 1) and 2) are not necessarily the same since 1) may contain circular components of MW flows not visible in 2). Flows that pass through the wheeling company are visible in both 1) and in 2). The algorithm for this method is illustrated below.

1) Calculate the AFCR, which is obtained from company cost data including long term debt, preferred stock, common equity, weighted cost of capital per year, operating and maintenance costs, taxes, administrative and general expenses, and insurance.
2) Calculate the net plant cost (NP)

$$\text{NP} = \text{BC} - \text{DR}$$

where BC is the developed book cost for each line and DR is depreciation reserve for each line.

3) Calculate the per-MW annual wheeling costs

$$\frac{\$}{\text{MW}} = \text{AFCR} * \sum_i \frac{\text{NP}_i}{i\ (\text{Peak Demand} + \text{Wheeling Increment})}$$

where i = transmission lines.

4) Calculate the total annual wheeling costs

$$\frac{\$}{\text{Year}} = \begin{cases} \frac{\$}{\text{MW}} * \left(\frac{1}{2} * \sum_i |\Delta\ \text{MW}_i|\right) \\ \frac{\$}{\text{MW}} * \left(\frac{1}{2} * \sum_k \Delta\ \text{Net Int}_k\right). \end{cases}$$

4) Line-By-Line Methods: The line-by-line methods consider the changes in MW flows due to the wheeling in all transmission lines of the wheeling companies, and the line length in miles. Two power flows executed successively, with and without the wheeling, yield the changes in MW flows in all transmission lines. The costing methodology is described as follows.

1) Calculate the AFCR and NP (the same as the postage stamp method).
2) Calculate the per-MW-mile annual wheeling costs

$$\frac{\$}{\text{MW-mile}} = \text{AFCR} * \frac{\sum_i \text{NP}_i}{\sum_i \text{MW-miles}_i}$$

where i = transmission lines.

3) Calculate the total annual wheeling costs

$$\frac{\$}{\text{Year}} = \frac{\$}{\text{MW-mile}} * \sum \Delta\ \text{MW-miles (three options exist).}$$

The first three steps calculate the annual wheeling costs in \$/MW-mile, with the numerator of step 2) remaining the same as in the postage stamp method. The embedded costs of the total transmission system are thus considered. The denominator in step 2) of the line-by-line method consists of the sum of MW-miles of the wheeling company. The individual MW in

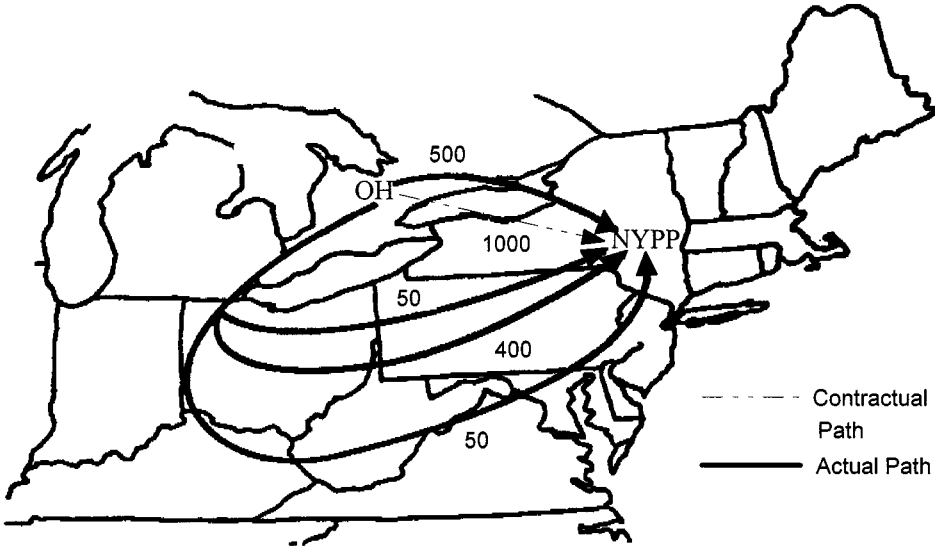

Fig. 2. Contract path and actual path when 1000 MW are wheeled from Ontario Hydro (*OH*) to southeastern New York power pool (*NYPP*) [13].

every MW-mile within the sum in step 2) corresponds to either: 1) the line rating provided in the input which is MW rating (design capability) or 2) the line loading. Each line MW is multiplied by its line length in miles. The wheeling costs in $/Year in step 3) are obtained by multiplying the $/MW-mile from step 2) by the sum of the changes in MW-miles of all transmission lines in the company, as determined from the two power flows.

Three options exist for calculating the wheeling costs in $/Year in step 3) depending upon how the ΔMW-mile is formed.

1) *Positive/Negative Flow Change Method:* The decrement of ΔMW-miles due to the wheeling are subtracted from positive ΔMW-mile changes and the wheeling costs are correspondingly lower or even reversed in sign.
2) *Absolute ΔMW-Mile Method:* ΔMW-mile changes are individually converted to absolute value and added.
3) *Positive Only ΔMW-Mile Method:* Only positive ΔMW-miles are used in computing the sum of the changes in MW-miles. The negative ΔMW-miles are ignored.

D. Discussion

The first two methods, the rolled-in-embedded and the contract path methods are the best known and most widely used of the four embedded-cost-of-wheeling methods. They do not require power flow executions and associated studies to identify the involved parties. Simplicity and ease of use are their principal advantages.

The boundary flow and the line-by-line methods require power flow executions as a part of their methodologies and, therefore, have the potential to improve upon the limitations of the first two methods. The assumption is that system studies are conducted over a sufficiently large area to identify the companies that are the principal carriers of the transaction. The advantages of the two methods are that they are intuitively appealing and comparatively easy to implement [12].

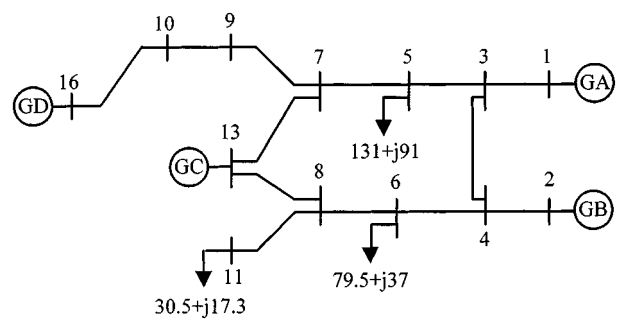

Fig. 3. One-line diagram of the sample system.

1) Issues on Postage Stamp Method: Basically, the concept of the postage stamp method is that the wheeling charge is for the usage of transmission access not related to the flow pattern. In addition to lower accuracy in the wheeling cost and less system study, the difficulty of calculating a wheeling charge share is the main drawback of this method if the wheeling system includes several companies.

Under the postage stamp rate procedure, every utility gets an equal impact for each power transfer. Actually, the impact on each utility is quite different. Moreover, the fixed postage stamp rate does not give the wheeling company or transmission company an incentive to invest and operate its network in the most economic and effective way, since the costs can be recovered from the power wheeling business. Thus, less competition is the main shortcoming of this method [2].

2) Issues on Contract Path Method: The actual path taken by wheeled power may be different from those identified in the contract path. As shown in Fig. 2, the power of Ontario Hydro is wheeled to the southeastern New York power pool. The wheeling increases the loading of already heavily loaded west-to-east transmission facilities in Pennsylvania, New Jersey, and Maryland (PJM) and results in an economic penalty.

Therefore, the wheeling companies whose actual power flows pass through but locate in the outside of the contract path receive

TABLE I

		Base Case and Basic Information			Load at Bus 11 is Supplied by GD			Load at Bus 11 is Supplied by GA		
From	To	Branch Flow (MW)	Length (Mile)	Owner	Branch Flow (MW)	|ΔMW|	ΔMW-mile	Branch Flow (MW)	|ΔMW|	ΔMW-mile
BUS 1	BUS 3	50.00	2.0	A	50.00	0.00	0.00	17.89	32.11	64.22
BUS 2	BUS 4	50.00	2.0	B	50.00	0.00	0.00	50.00	0.00	0.00
BUS 3	BUS 4	12.15	18.0	B	0.70	11.45	206.10	-3.57	15.72	282.96
BUS 3	BUS 5	37.28	5.0	A	48.74	11.46	57.30	21.35	15.93	79.65
BUS 4	BUS 6	61.28	4.0	B	50.14	11.14	44.56	45.85	15.43	61.72
BUS 5	BUS 7	-94.86	2.0	A	-83.92	10.94	21.88	-110.35	15.49	30.98
BUS 6	BUS 8	-20.14	6.0	B	-30.64	10.50	63.00	-34.71	14.57	87.42
BUS 7	BUS 9	-81.86	0.5	C	-49.68	32.18	16.09	-81.73	0.13	0.06
BUS 7	BUS 13	-15.26	9.0	C	-36.02	20.76	186.84	-31.70	16.44	147.96
BUS 8	BUS 11	30.65	1.0	D	0.00	30.65	30.65	0.00	30.65	30.65
BUS 8	BUS 13	-51.07	10.0	D	-31.30	19.77	197.70	-35.57	15.50	155.00
BUS 9	BUS 10	-82.18	2.0	C	-49.81	32.37	64.74	-82.05	0.13	0.26
BUS 10	BUS 16	-83.77	0.5	C	-50.45	33.32	16.66	-83.65	0.12	0.06
BUS 13	BUS 14	-69.76	0.5	C	-69.76	0.00	0.00	-69.76	0.00	0.00

TABLE II

	Load at Bus 11 is Supplied by GD		Load at Bus 11 is Supplied by GA	
	ΣΔMW-mile	$/Year	ΣΔMW-mile	$/Year
Company A	79.2	9501.6	174.9	20982.0
Company B	313.7	18819.6	432.1	25926.0
Company C	284.3	24168.1	148.3	12609.3
Company D	228.4	10732.5	185.7	8725.6
Annual Wheeling Cost		63221.7		68242.9

no compensation and have little or no control. The wheeling costs may correspondingly not reflect the actual wheeling costs incurred by all the companies affected by the transaction.

3) Issues on Boundary and Line-By-Line Methods [14]: The limitations of boundary and line-by-line methods are that the two methods do not consider reinforcement costs and changes in production costs as a result of a required change in dispatch and/or commitment due to the presence of the power transfer [12]. In addition, the charge does not consider the effects of reactive power. Reactive power flow can affect line losses and voltage magnitudes. When customer loading is heavy, reactive power flow can push bus voltages, tap change transformer settings or circuit loading to their limits, or when oppositely oriented can bring them off limits. At the present time, the wheeling charge method is precalculated, not real time, and does not reflect the actual customer loading condition.

III. Wheeling Charge in ERCOT [6]

The Public Utility Commission of Texas (PUCT) has determined that the wheeling charge in Texas will be based upon a 70% postage stamp component and a 30% distance-sensitive component (MW-mile impact), according to PUCT Rules 23.67 and 23.70. The distance-sensitive component is referred to as the VAMM method. The MW-mile impact due to the wheeling power is multiplied by the wheeling rate last filed with the PUCT. This will result in the annual charges for the power transfer. The portion of the VAMM charge in ERCOT is determined as follows.

1) *Determine the MW-Mile Annual Wheeling Cost:* The annual cost of providing transmission service on the wheeling service shall be determined from the wheeling utility's cost-of service-study as most recently approved by the commission of the PUCT (annual expense, depreciation, federal income tax, and so forth.)
2) *Establish the Base Case:* Based on the operation/transaction plan of each participating utility company, a base case will be established for the wheeling calculation. This normally includes firm transactions, long-term transactions, and transmission lines with nominal line-to-line voltage of 60 kV and above.
3) *Establish the Events and Calculate the Impact* $|\Delta\text{MW}|$, *of Each Event:* Based on ownership or contractual arrangement, assign the load–generator pair as an event. The impact is determined from the difference between the base case and the case without wheeling.
4) *Calculate the* $|\Delta\text{MW-mile}|$ **:** The $|\Delta\text{MW}|$ as determined from the previous calculation shall be multiplied by the length of the respective line to calculate the $|\Delta\text{MW-mile}|$ impact.
5) Calculate the Overall Impact $\Sigma|\Delta\text{MW-mile}|$: The MW-mile changes for all lines shall be summed to determine the total MW-mile impact on the system.
6) The annualized facility charge (AFC) will be

$$\frac{\$}{\text{Year}} = \frac{\$}{\text{MW-mile}} * \sum |\Delta\text{MW-mile}|.$$

The VAMM calculation is a measurement of a generator's impact on a transmission system in the normal process of serving that generator's load (determined by ownership or contractual arrangement). A sample system to illustrate the concept of VAMM calculation is shown in Fig. 3. The procedure of VAMM calculation is listed below and the results are shown in Tables I and II.

Step 1: Establish the base case. Assume the per-MW annual wheeling charge, \$/MW-mile, of the transmission providers A, B, C, and D are \$120, \$60, \$85, and \$47, respectively.

Step 2: Define the event. For illustration purposes, two events (Bus 11-GA and Bus 11-GD) are used in the example.

Step 3: Calculate the impact of the transaction. If the load is more than 100 MW and is supplied from a single source, reduce 100 MW from the load bus in the test. If the load is less than 100 MW and is supplied from a single source, remove the entire load from the data file. Select the supply generator as the swing bus and rerun the power flow.

Step 4: Calculate the $|\Delta\text{MW}|$ and $|\Delta\text{MW-mile}|$ of each individual branch.

Step 5: Calculate the $\Sigma|\Delta\text{MW-mile}|$ impact to each transmission provider.

Step 6: Calculate the AFC of every transmission service provider.

IV. Conclusion

Today's electric power industry is undergoing many fundamental changes due to the process of deregulation. One of the most exciting opportunities for the customer is the implementation of wholesale and retail wheeling. With this change, customers have the option to purchase services and energy from different sources. However, the costs of wheeling and other factors have to be figured into the calculation. Industrial sectors need to reevaluate potential impacts and strategies for operations under the deregulated environment. Since it is impossible to color the electron, there is no standard formula for calculation the wheeling charge in the utility industry. This paper has discussed and compared several commonly used wheeling calculation methods used by utility companies. A numerical example was provided to illustrate the VAMM method that is used by ERCOT.

References

[1] W. J. Lee and C. H. Lin, "Utility deregulation and its impact on industrial power systems," *IEEE Ind. Applicat. Mag.*, vol. 4, pp. 40–46, May/June 1998.

[2] C. F. Chen, "A study of the operational issue of the transition and deregulation of Taiwan power industry and systems, with emphasis on system stability, reactive power, and power wheeling," Ph.D. dissertation, Dept. Elect. Eng., Univ. Texas, Arlington, 1996.

[3] J. J. Knight, Jr., "Customer choice through direct access: Charting sustainable course to a competitive electric service industry," California Public Utility Commission, San Francisco, CA, 1995.

[4] "Response of Southern California Edison to order instituting rulemaking and order instituting investigation dated April 20, 1994," Southern California Edison Co., Los Angeles, CA, June 8, 1994.

[5] "U.S. Congress, Office of Technology Assessments, Electric power wheeling and dealing: Technological consideration for increasing competition," U.S. Government Printing Office, Washington, D.C., Rep. OTA-E-409, May 1989.

[6] "Guidelines for economy electricity transfer in ERCOT," Electric Reliability Council of Texas (ERCOT), Austin, TX, Oct. 1995.

[7] A. S. Holmes, "A review and evaluation of selected wheeling arrangements and a proposed general wheeling tariff," Federal Energy Regulatory Commission, Washington, DC, FERC Paper, Sept. 1983.

[8] F. C. Schweppe, M. C. Caramanis, R. D. Tabors, and R. E. Bohn, *Spot Pricing of Electricity*. New York: Kluwer, 1988.

[9] H. M. Merrill and B. W. Erickson, "Wheeling rates based on marginal cost theory," *IEEE Trans. Power Systems*, vol. 4, pp. 1445–1451, Oct. 1989.

[10] M. C. Caramanis, R. E. Bohn, and F. C. Schweppe, "The cost of wheeling and optimal wheeling rates," *IEEE Trans. Power Syst.*, vol. 1, pp. 63–73, Feb. 1986.

[11] D. Shirmohammadi, P. R. Gribik, E. T. K. Law, J. H. Malinowski, and R. E. O'Donnel, "Evaluation of transmission network capacity use for wheeling transactions," *IEEE Trans. Power Syst.*, vol. 4, pp. 1405–1413, Oct. 1989.

[12] H. H. Happ, "Cost of wheeling methodologies," *IEEE Trans. Power Syst.*, vol. 9, pp. 147–156, Feb. 1991.

[13] R. M. Maliszewski, "Transmission made easy," presented at the EEI Legal Committee Meeting, San Francisco, CA, May 3, 1986.

[14] Y. Z. Li and A. K. David, "Wheeling rates of reactive power flow under marginal cost pricing," *IEEE Trans. Power Syst.*, vol. 9, pp. 1263–1269, Aug. 1994.

Wei-Jen Lee (S'85–M'85–SM'97) was born in 1956. He received the B.S. and M.S. degrees from National Taiwan University, Taipei, Taiwan, R.O.C., and the Ph.D. degree from the University of Texas, Arlington, in 1978, 1980, and 1985, respectively, all in electrical engineering.

In 1985, he joined the University of Texas, Arlington, where he is currently a Professor in the Electrical Engineering Department. He has been involved in research on power flow, transient and dynamic stability, voltage stability, short circuit, relay coordination, power quality analysis, and deregulation for utility companies. He is also involved in research on the design of integrated microcomputer-based monitoring, measurement, control, and protection equipment for electric power systems.

Prof. Lee is a Registered Professional Engineer in the State of Texas.

C. H. Lin (S'95–M'99) received the B.S. degree from National Taiwan Institute of Technology, Taipei, Taiwan, R.O.C., the M.S. degree from the University of Pittsburgh, Pittsburgh, PA, and the Ph. D. degree in electrical engineering from the University of Texas, Arlington, in 1991, 1993, and 1997, respectively.

He is presently an Associate Professor at Kao Yuan Institute of Technology, Kaohsiung, Taiwan, R.O.C. His areas of interest include power wheeling, distribution automation, and computer applications to power systems.

Larry D. Swift (M'78) received the B.S. degree in electrical engineering from New Mexico State University, Las Cruces, and the Master's and Ph.D. degrees from the University of Texas, Arlington, in 1972, 1994, and 1998, respectively.

He is currently an Instructor at the University of Texas, Arlington, and a Research Associate in the Energy Systems Research Center located on campus. He is presently teaching, working on a power simulation project, and continuing research in the areas of power system management and power marketing.