EVALUATION AND APPLICATIONS OF GAS SENSORS

by

HUNG VIET CAO

Presented to the Faculty of the Graduate School of

The University of Texas at Arlington in Partial Fulfillment

of the Requirements

for the Degree of

MASTER OF SCIENCE IN ELECTRICAL ENGINEERING

THE UNIVERSITY OF TEXAS AT ARLINGTON

August 2007

ACKNOWLEDGMENTS

I would like to express my appreciation and thankfulness to my supervising professor Dr. Jung-Chih Chiao. His support and encouragement enlighten me to finish this work and inspire me to follow a bright research life ahead. My sincere appreciation also extends to Dr. Bredow, Dr. Dillon and Dr. Davis to be my thesis committee.

I also appreciate Dr. H. E. Stephanou and Dr. J. Sin for giving me excellent facilities and a good working environment in ARRI. Many experiments in this work were done in ARRI cleanroom.

A special thanks to my research group members; especially to Thermpon and Peter who worked with me in the gas sensors project; and all of my friends for giving me suggestions and information to finish this work.

I would like to express my gratitude to my wife, Trang and my little baby Sean for being here and supporting me all the time. Furthermore, I would like to thank my father and my sister. Their academic success is a great motivation for my endeavor.

April 10, 2007

ABSTRACT

EVALUATION AND APPLICATIONS OF GAS SENSORS

Publication No. _____

Hung Viet Cao, M.S.
The University of Texas at Arlington, 2007

Supervising Professor: Dr. Jung-Chih Chiao

Gas sensors are used widely for environmental and biomedical uses. This work focuses on verifying specifications of commercial-off-the-shelf (COTS) gas sensors and their particular applications.

The first chapter in this thesis gives a literature review on gas sensors, especially metal-oxide based sensors and their advantages. The second chapter focuses on evaluation of COTS NO_2 sensors. The purpose is to establish a characterization method to evaluate gas sensors. I have evaluated three COTS metal-oxide based NO_2 sensors and a COTS electrochemical sensor for comparison. Four different tests have been implemented to investigate the sensitivity, humidity effects, temperature effects, and selectivity for each sensor. A general method for calibration and uses of metal-oxide based NO_2 sensor for environmental monitoring is discussed.

Chapter 3 focuses on a specific metal-oxide based CO_2 sensor and its application to fight the Sudden Infant Death Syndrome (SIDS) problem. In this chapter, I discuss SIDS and the importance to prevent it. A COTS CO_2 sensor has been characterized for designing the system. A complete system using the radio frequency identification (RFID) technique to monitor multiple infants has been proposed and designed. A system that can be used to monitor two infants simultaneously has been designed and assembled with printed circuit boards (PCBs). The overall system has been characterized under practical considerations. The results are as predicted.

Chapter 4 discusses a web-based search engine system from which users can search for specific sensors with desired specifications. An Active Server Page (ASP) using VBscript and Microsoft Access Database is used to implement the system. The database of sensors is stored in the server.

Chapter 5 concludes the thesis with discussions of future works and the trend of utilizing gas sensors to improve human life.

TABLE OF CONTENTS

LIST OF ILLUSTRATIONS

LIST OF TABLES

CHAPTER 1

GAS SENSOR REVIEW

1.1. Introduction

Gas sensors have been used for years for both indoor and outdoor gas monitoring systems. Users' concerns are the accuracy, working range and lifetime. All sensors have the datasheet supported by the manufacturer; however, the datasheet may not be always accurate measured by different standards and it lacks certain information about the product. Therefore, systematic evaluation and calibration of COTS sensors will give users better ideas about available sensors.

Currently, commercial gas sensors are available in the market. They include electrochemical sensors [1-3], metal-oxide sensors [1-5] and infrared sensors [1-3]. In general, metal-oxide sensors have relatively longer lifetimes and smaller sizes [1], making them suitable for a wide range of applications in which the sensor needs to remain functional for several years while confined inside a machine for monitoring local environment and equipment health.

Performance of sensors can be affected by various environment parameters, such as changes in temperature, humidity and the presence of other gases [6-10]. Typically, this type of information is not well defined as standards since these commercially available sensors are often tested individually.

Tang *et al.* [11] reported an automated precision gas sensor characterization system for integrated or discrete gas sensors. It was used for both dynamic and steady-state measurements to characterize two types of commercial gas sensors. A gas sensor characterization system was developed by Chen *et al.* [12] to test electrical characteristics (e.g., resistance and capacitance) and performance of gas sensors exposed to various stimuli and gas flow rates. There were several gas sensor measurement systems proposed in the literatures [13-14], however, comprehensive comparative test results for COTS metal-oxide sensors have not been available. In Chapter 2 of this thesis, a systematic evaluation which characterizes and compares different COTS NO_2 sensors in sensitivity, selectivity, humidity and temperature dependence, and linearity is presented. The results provide sensor performance data obtained in various environmental conditions and target gas concentrations.

Chapter 3 discusses a specific metal-oxide based CO_2 sensor and its application to fight Sudden Infant Death Syndrome (SIDS). In this chapter, I discuss SIDS and the importance to prevent it. A COTS CO_2 sensor was chosen and tested to have the exact specifications before designing the system. A system using Radio Frequency Identification (RFID) to be used for monitoring multiple infants has been proposed. Finally, a simple system that can be used for two infants has been designed and assembled in printed circuit boards (PCB). The overall system has been tested showing predictable results.

1.2. Metal-oxide sensors

1.2.1 Working principle of metal-oxide sensors

There are three main components in a metal-oxide sensor: sensing material, electrodes, and a heater as shown in Fig. 1.1

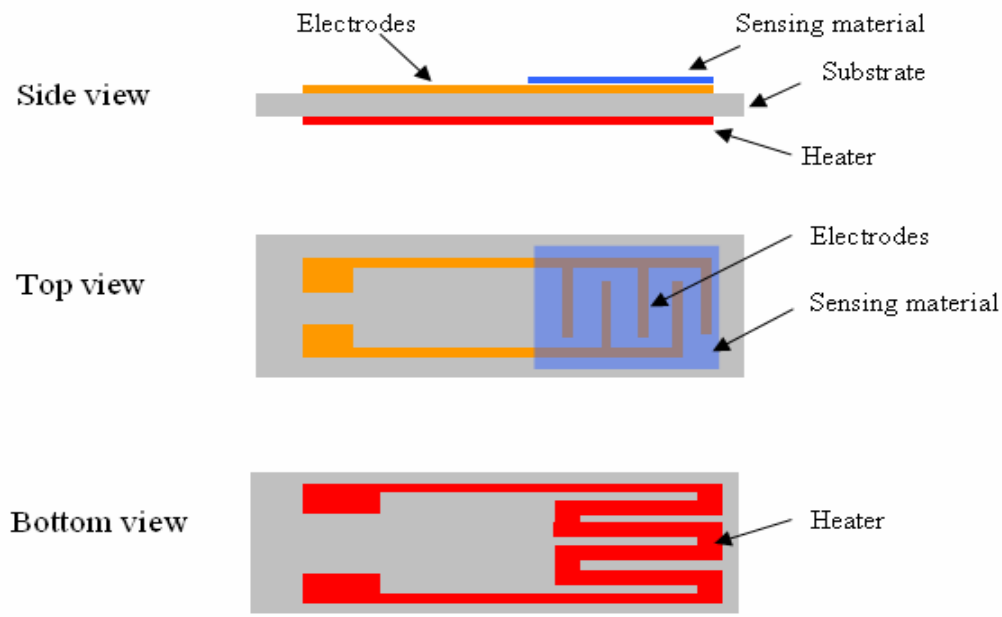

Figure 1.1 Sensor elements [15].

The commonly used sensing materials include SnO_2, WO_3 or In_2O_3 [16]. These materials react with the target gas molecules inducing chemical potential changes [17-18]. The electrodes connect to the sensing material to form a closed-loop circuit [10, 16]. A heating element at the substrate is used to regulate the sensor temperature, since metal-oxides exhibit different gas response characteristics at different temperatures [10, 16]. A typical packaged metal-oxide sensor has four electrical connections. Two connections are used to measure the resistance of the sensing material while the other

two to provide powers to the resistive heater [17]. The resistance changes are typically measured using a simple voltage divider as shown in Fig. 1.2.

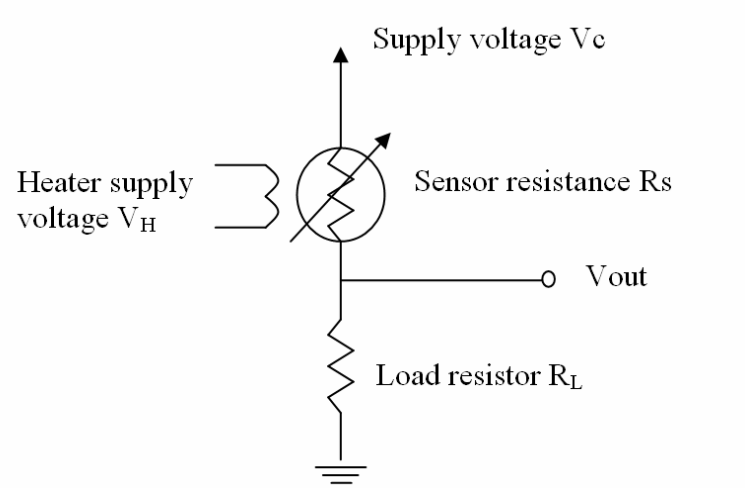

Figure 1.2 Schematic of circuit used in metal-oxide sensors.

The circuit requires two voltage supplies: one for the heater (V_H) and one for the sensor (V_C). V_C is applied for measuring the output voltage (V_{out}) across a load resistor (R_L) [19] and the sensor resistance (R_S) is calculated as

$$R_s = \frac{V_C - V_{out}}{V_{out}} \times R_L \tag{1.1}$$

1.2.2 Characteristics

Metal-oxide sensors, or solid-state sensors, are among the most versatile of all sensors, since they detect a wide variety of gases, and can be used in many different applications.

The main strength of the metal-oxide sensor is its life expectancy. Theoretically, it can last 10 years or more in clean applications. This is a major advantage compared to other sensors such as electrochemical sensors, which typically last only 6 months to 2

years. Nevertheless, metal-oxide sensors are more susceptible to interference gases than the other types of sensors; requiring users to test them carefully. This problem can be resolved by adding a charcoal filter to eliminate the affect of interference gases [1].

Among their advantages are the abilities of the sensor to detect both low levels of gases, as well as high combustible levels. Often, in chemical plants, the lower ranges need to be monitored for certain gases at toxic concentrations while simultaneously, the combustible range for explosive concentrations. The metal-oxide sensor is capable of detecting gas in both ranges. This will simplify the system design and maintenance required because it minimizes the use of multiple sensor technologies [1].

1.2.3 Commercial metal-oxide sensors

There is variety of available COTS metal-oxide gas sensors in the market. All gas sensors from Figaro Inc. [44] are metal-oxide base sensors including oxygen, carbon monoxide, carbon dioxide and many others while products from Applied sensors [18] are based on the metal-oxide-semiconductor principle. In general, those products are compact, inexpensive and have long lifetimes. Their performances are acceptable in many popular applications.

CHAPTER 2

EVALUATION OF COMMERCIAL NO_2 SENSORS

2.1 Introduction

Nitrogen dioxide (NO_2) is an extremely toxic gas generated primarily from the liberation of nitrogen contained in fuel as a byproduct of combustion processes [20-21]. Any form of nitrogen oxide (NO_x) at levels greater than 1ppm can cause serious damage to human respiration systems and lung tissues. The small molecules can penetrate deeply into the sensitive parts of lungs causing or worsening respiratory diseases such as emphysema and bronchitis or aggravate existing heart disease [20]. NO_2 is also a source of acid rain, damaging buildings and polluting water sources [22-23]. Thus, monitoring NO_2 plays an important role in making our environment safer and cleaner [1-2].

2.2 Experimental setup

Three COTS metal-oxide NO_2 sensors were evaluated. A COTS electrochemical sensor was also evaluated as a reference. Specifications of the sensors supplied by their respective manufacturers are summarized in Table 2.1.

Table 2.1 Specifications of the evaluated sensors.

Specifications		**Sensor A**	**Sensor B**	**Sensor C**	**Sensor D**
Working mechanism		Electrochemical	Metal-oxide	Metal-oxide	Metal-oxide
Sensing range		0-20ppm	0-200ppm	1ppm	0.1-2ppm
Response time		T90* < 60s	T90 < 90s	N/A	Seconds
Temperature range		-40 to 50 ^{o}C	-40 to 100 ^{o}C	-40 to 85 ^{o}C	-40 to 120 ^{o}C
Humidity range		15-90%	0-99%	5-95%	0-95%
Power consumption		N/A	N/A	750mW	35mW
Cell life		6 months	> 5 Years	N/A	Years
Size	Diameter	Ø: 32.3mm	Ø: 10mm	Ø: 15mm	Ø: 10mm
	Height	16.5mm	11mm	21.6mm	11mm

*T90 is defined as the time for a sensor to reach 90% of its stable value.

A gas mixing system from *Environics (Series 4000)* was used to generate required concentrations of the target gas. The system also provides humidity control. Fig. 2.1 shows the configuration of the experimental setup. A gas fume hood in a class-10000 cleanroom provides a safe and isolated environment for testing toxic gases such as NO_2. The gas mixing system can dilute the NO_2 down to ppb levels. A hot plate was used in a stainless steel chamber to heat up the gases for temperature variations.

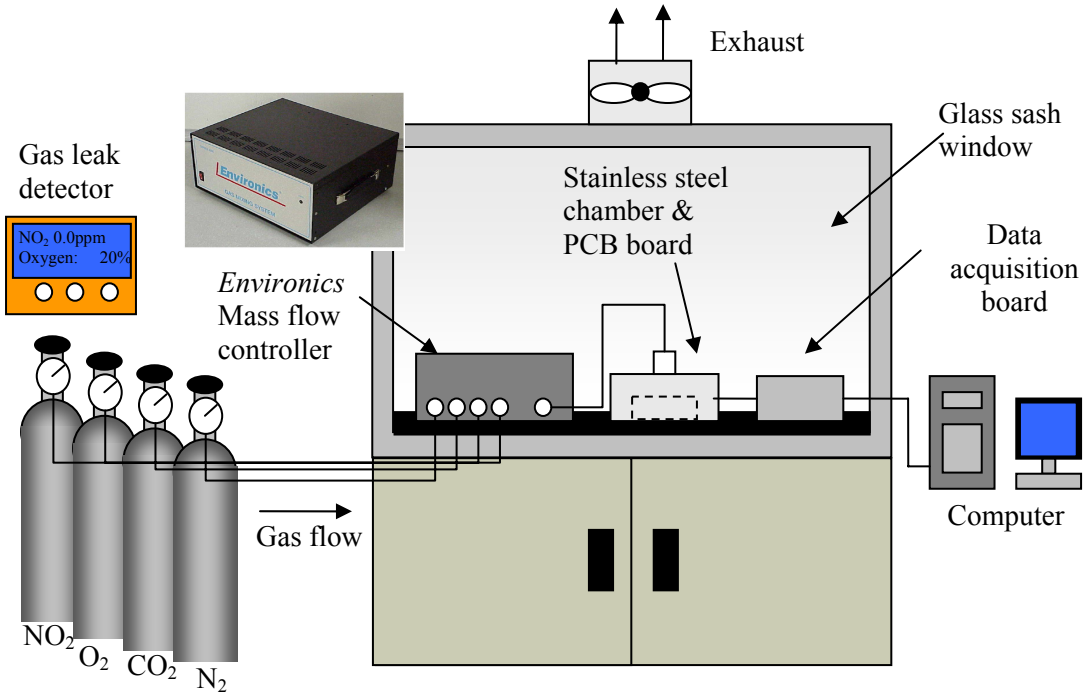

Figure 2.1 System diagram for NO_2 sensor evaluation.

The four sensors were mounted in the sockets (#1, #2, #3, #4) on a home-made PCB board as shown in Fig. 2.2. A common testing environment is maintained for all sensors. A combined humidity and temperature sensor *Honeywell (HIH-3602-C)* was integrated on the PCB board (at the socket #5) to monitor the environmental conditions. An additional socket (#6) was placed on the board for our in-house NO_2 sensor under development. The board can also be used for other gas sensors (CO_2 and O_2) to monitor mixed gases during the selectivity tests. The sensor A, B and D manufacturers provided evaluation boards with the sensors. The evaluation boards could be connected to the sensors through the ribbon cable on the PCB board. A *LabVIEW* data acquisition card was used to acquire the sensor signals for the sensors A, B, and C. A software package

provided by the manufacturer was used for the sensor D. A stainless steel chamber with dimensions of 7×7×3 cm^3 was used to enclose the PCB. The mixed gas was supplied through a tube at the top of the chamber.

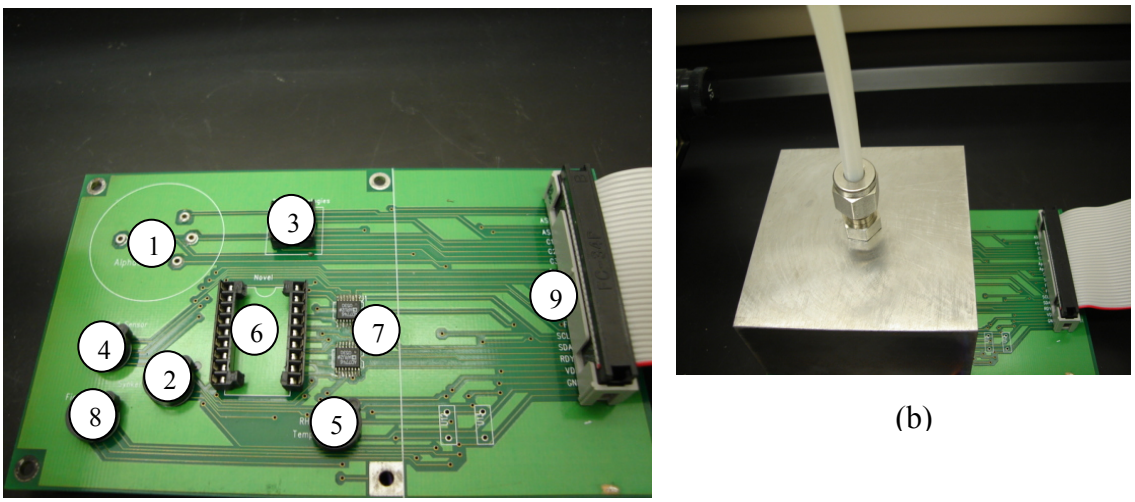

(a) (b)

1. Sensor A. 2. Sensor B. 3. Sensor C. 4. Sensor D. 5. Humidity and temperature sensor. 6. Socket for an in-house sensor. 7. ICs 8. CO_2 or O_2 sensor. 9. Ribbon cable

Figure 2.2 The home-made PCB board for evaluating (a) and the enclosure chamber (b).

2.3 Evaluation procedures and results

Four different tests were implemented to investigate the sensitivity, humidity effects, temperature effects, and selectivity for each sensor [14, 17, 24-27]. The objectives for each test are:

2.3.1 Sensitivity

The sensitivity indicates how well the sensor can distinguish various concentration levels of NO_2. In the sensitivity tests, we also verify the sensing ranges and response time at various concentrations of NO_2.

2.3.2 Humidity effect

Water molecules tend to adhere to the surface of the sensing membranes in metal-oxide sensors. We examine the performance change for each sensor with different levels of humidity.

2.3.3 Temperature effect

We test for changes in sensor performance at temperatures above room temperature.

2.3.4 Selectivity

The selectivity of metal-oxide gas sensors depends on the oxidization of the gas molecule with the membrane. We examine the sensor performance dependence of other oxidization gases such as CO_2 and O_2.

2.4 Sensitivity

The NO_2 concentrations chosen for the sensitivity tests were 1.2, 2.0, 5.0, 8.0, and 10.0ppm [27] with a gas flow rate of 1000ccm at the room temperature (24°C) and zero humidity. The tests were done by first purging the chamber with N_2 for 3 minutes and supplying diluted NO_2 for measurement. This procedure was repeated for various concentrations. The tests were performed both by increasing and decreasing the NO_2 concentration between 1.2 and 10.0ppm. Fig. 2.3 shows the results. In the plots, α and Δ are defined as the noise amplitude and the inaccuracy among various runs, respectively.

Based on the manufacturer data sheets, the maximum operating ranges of sensors C and D are 1 and 2ppm, respectively. However the sensors were tested in

ranges up to 10ppm. The results showed that the sensor C was able to distinguish the NO_2 concentrations of 2 and 5ppm. For higher concentration, the sensor started to saturate since the sensor response shows very little changes above 5ppm. Sensor D showed good responses to the NO_2 concentration up to 10ppm when the concentration kept increasing from 1 to 10ppm. However when the concentration of NO_2 deceased from 10 to 1ppm, the sensor showed saturation for the concentration higher than 5ppm. This saturation might be caused from a compensation mechanism in the evaluation board from the manufacturer.

The data from Fig. 2.3 were normalized and plotted in Fig. 2.4 to compare the output of each sensor. For the sensor A, the output of 3.5mA was normalized as 0% and the output of 6.5mA was normalized as 100%. For the sensor B, C and D, their outputs of 0-0.8V, 0-0.18V and 0-10MΩ were normalized as 0-100%, respectively.

From figure 2.3, the inaccuracy (Δ) of all metal-oxide sensors was high when compared with the sensor A, and it also varies with different NO_2 concentrations. The Δ of the sensor B was less than 10% at all concentrations and it was the most consistent among three metal-oxide sensors. However, sensor B was not sensitive at concentrations below 5ppm.

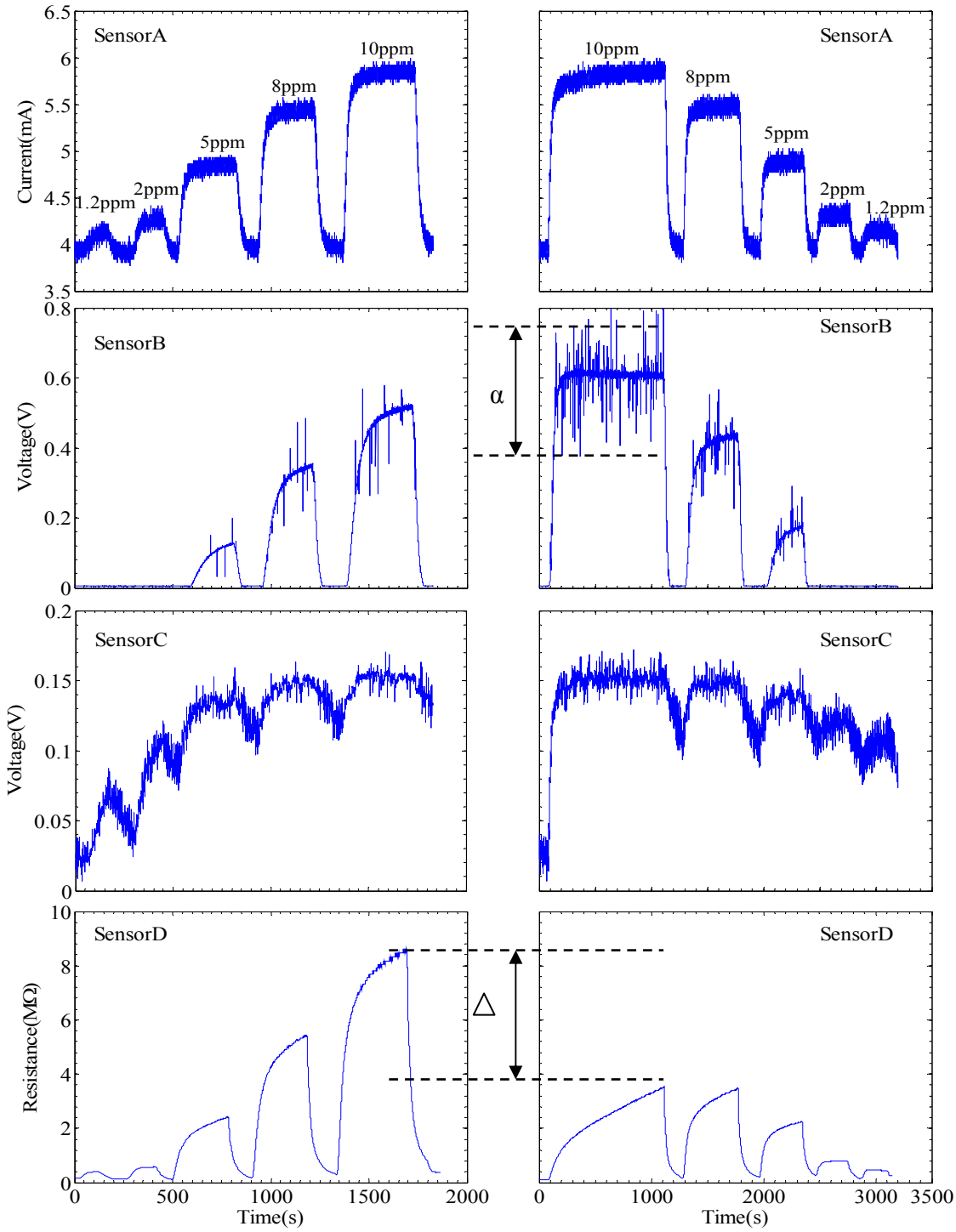

Figure 2.3 Sensor responses for (left) increasing concentrations of NO_2 (1.2, 2.0, 5.0, 8.0 and 10.0ppm) and (right) decreasing concentrations of NO_2 (10.0, 8.0, 5.0, 2.0 and 1.2ppm).

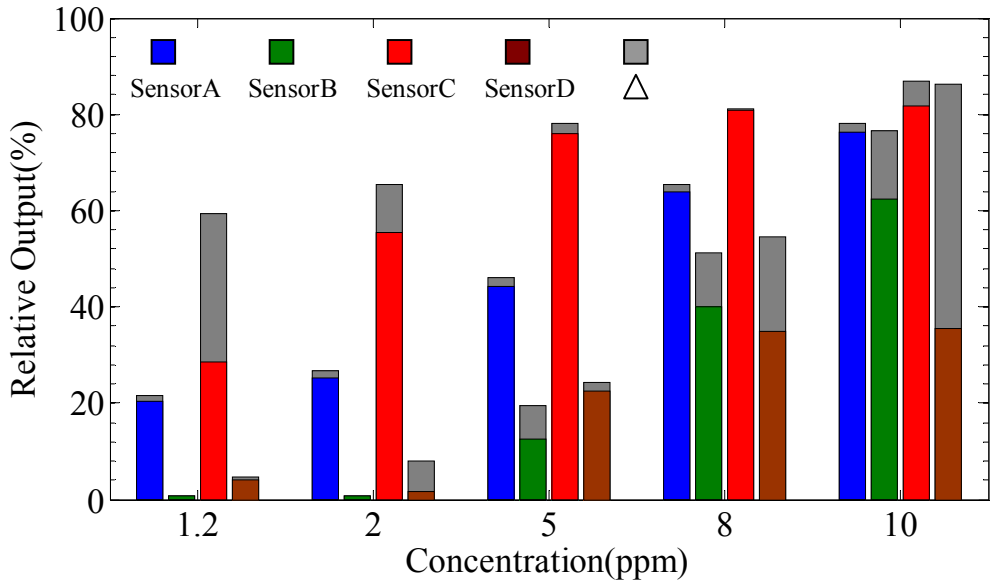

Figure 2.4 Normalized sensor responses.

For the sensor C, the Δ tended to increase when the concentration of NO_2 decreased, and the Δ was 30% at 1.2ppm. The Δ of the sensor D was 50% at 10ppm. It is likely due to the fact that it was tested out of the specification ranges.

The linearity of each sensor was examined using the data in Fig. 2.3 where the sensors were tested by monotonously increasing or decreasing concentrations. Ideal sensors should demonstrate a high degree of linearity for a simple calibration. For each sensor, five data points at concentrations of 1.2, 2, 5, 8 and 10ppm were calculated by averaging the raw data for 10 seconds at each concentration. The correlation coefficient, R, indicates linear reliability [28]. When value R^2 is close to unity, this indicates a better performance. Fig. 2.5 shows the linearity of each sensor and the corresponding R^2 values.

As shown in Fig. 2.5, sensor A has the highest correlation coefficient and similar responses for both increasing and decreasing concentration measurements. The metal-oxide sensors have acceptable linearity, but the linearity slopes are different for the increasing and decreasing concentration cases. The slope in Fig. 2.5 is defined as sensing resolution and the results are shown in Table 2.2. The response times (T90) is defined as the time for a sensor to reach 90% of its stable value. The response times of the sensors in Table 2.2 were measured at 10ppm. They were measured with a chamber size of 7×7×3 cm^3 and a flow rate of 1000ccm. The response time may vary for different chamber sizes or gas flow rates.

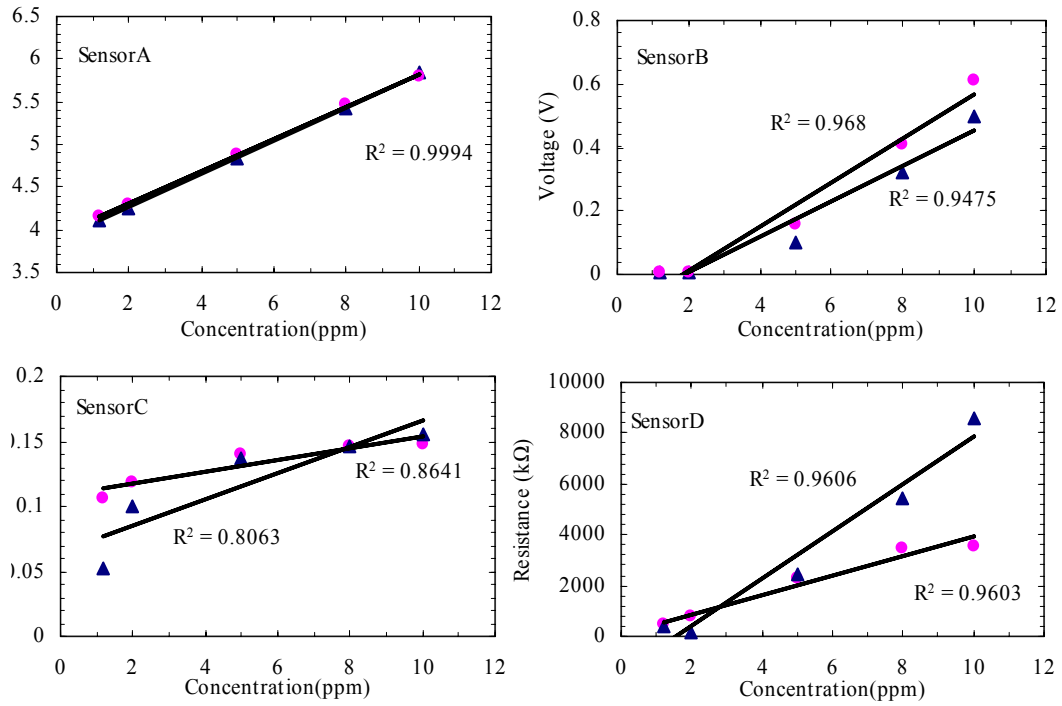

Figure 2.5 Linearity and squared linear reliability of each sensor as increasing and decreasing the gas concentrations.

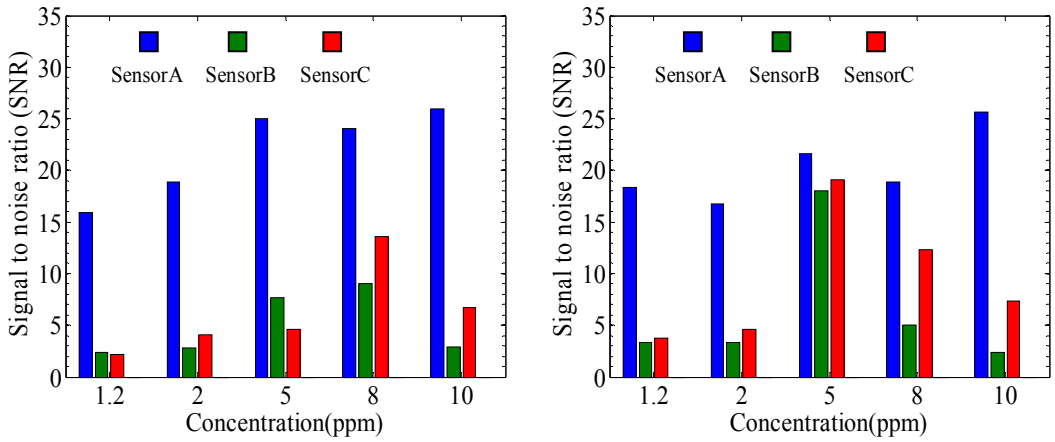

Figure 2.6 Signal to noise ratio (SNR) of sensors with increasing and decreasing gas concentrations.

Table 2.2 Sensor resolution and response time.

Sensor	A	B	C	D
Resolution	0.1879mA/ppm	69.6mV/ppm	4.5mV/ppm	933.12kΩ/ppm
Response time	44s	131s	103s	170s

Fig. 2.6 compares the signal to noise ratio (SNR), defined as the ratio of the average signal level for each NO_2 concentration to the noise amplitude α in a 20-second period. This SNR value quantifies measurement fluctuations due to noises. The SNR of the sensor D is negligible due to its small signal fluctuation, and the fact that it did not reach to a saturation point in the given test time.

The SNR of the sensor A is the highest and most consistent one because of the small and stable values of noise. The sensors B and C have lower SNRs but the values vary with NO_2 concentrations. Moreover, the noise amplitudes vary with time and consequently vary the SNRs dramatically.

2.5 Humidity effects

The sensors were tested at three different humidity levels of 20%, 50% and 70% with an NO_2 concentration of 10ppm and a flow rate of 1000ccm. The humidity level was varied with a certain profile as shown in Fig. 2.7. The right graph in Fig. 2.7 shows the result of sensors under humidity variation. The electrochemical sensor A was slightly affected by humidity while others showed noticeable changes. In general, higher humidity levels tend to decrease the signal levels of metal-oxide sensors. This is due to the reduction of the sensor resistance, *Rs*, as water vapor adsorbed by the sensing membrane [10]. The output signal of the sensor B, however, increased as the humidity increased. We investigated the reason and verified the results with another experiment. The result is shown in Fig. 10. The sensor was first exposed to 0% relative humidity (R.H.), and then a humidity of 20% was introduced. The output signals decreased quickly and then increased gradually as the relative humidity level increased. Knowing that the evaluation board of the sensor B has a humidity compensation circuit, it might be the reason of signal increasing when the humidity increases.

The sensor C shows the smallest decrease among all the test results. The sensor D showed a large reduction in resistance at high humidity levels. The humidity was controlled using the tuning valves in the gas mixing system. As a result, there were instantaneous changes in the flow rate and short-term effects on the sensors. The transits last about 46 and 35 seconds while 20% and 40% of humidity levels were introduced, respectively. The results were verified again by decreasing the humidity from 70% to 20% at the same concentration of NO_2 as shown in Fig. 2.9. The signals from the

sensors A, C, and D increased with lower humidity, and the signal from the sensor B slightly decreased with lower humidity, which is consistent with the previous results. Additional tests using an NO_2 concentration of 5ppm were performed to evaluate the effect of humidity on the sensors. The results showed very similar effects of humidity on the sensors when compared of 10-ppm NO_2 concentration.

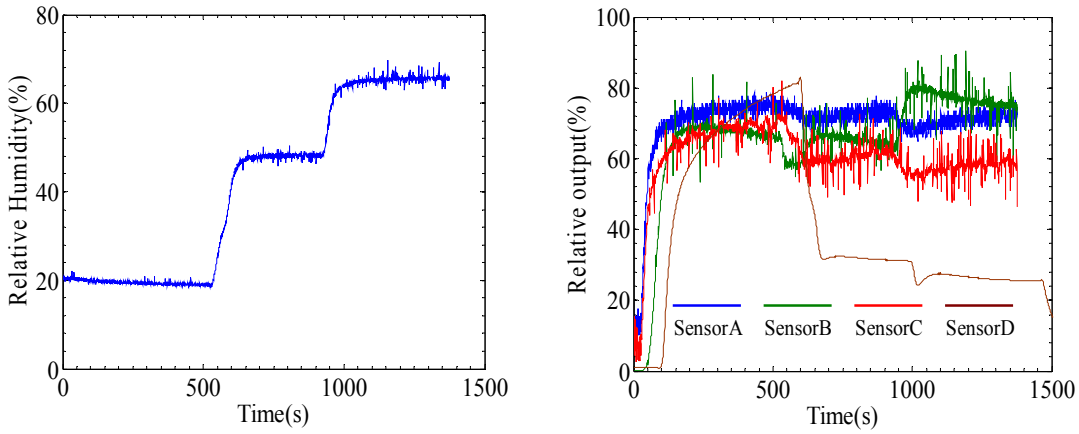

Figure 2.7 Humidity profile varies from 20% to 70% and corresponding sensor responses.

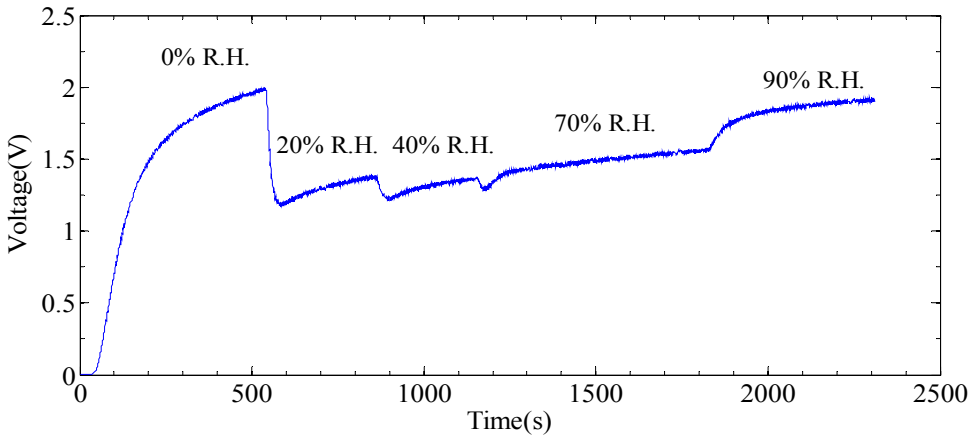

Figure 2.8 Output of the sensor B with respect to humidity changes.

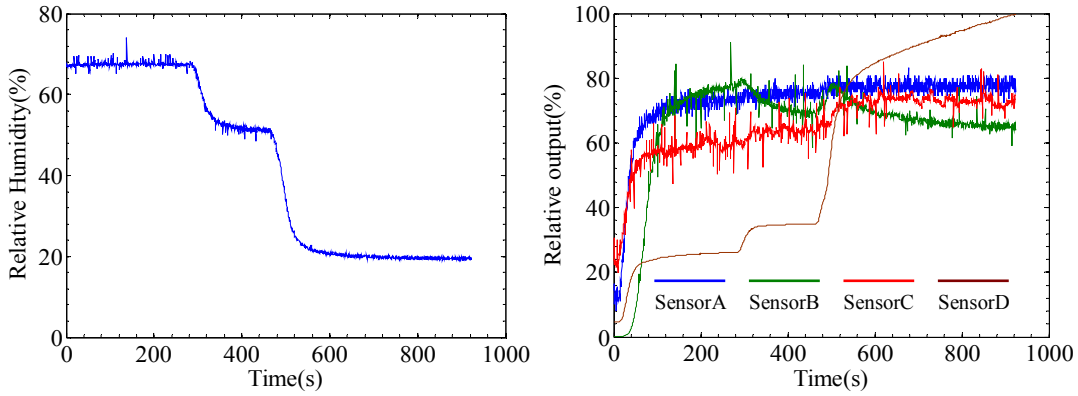

Figure 2.9 Humidity profile varies from 70% to 20% and corresponding sensor responses.

2.6 Temperature effects

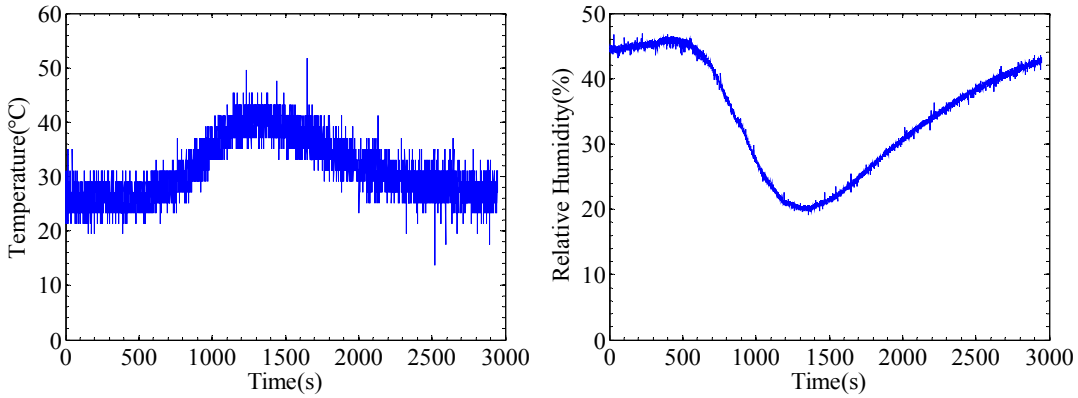

Figure 2.10 Measured temperature and humidity levels.

A hot plate was used to heat up the whole stainless steel chamber to 40°C. The NO_2 concentration was set at 5ppm, and the total flow rate was controlled at 1000ccm. The gas humidity level was set at 50% while the temperature and humidity were monitored (Fig. 2.10) in the chamber. We verified the humidity changes on the test board during the temperature changes. The sensor responses are shown in Fig. 2.11 with real time measurements and relative outputs normalized to the responses at 25°C. The

humidity decrease with the temperature increase reduced the sensor outputs of sensors B, C and D significantly. The same experiment was performed again at 60°C and all sensor outputs decreased.

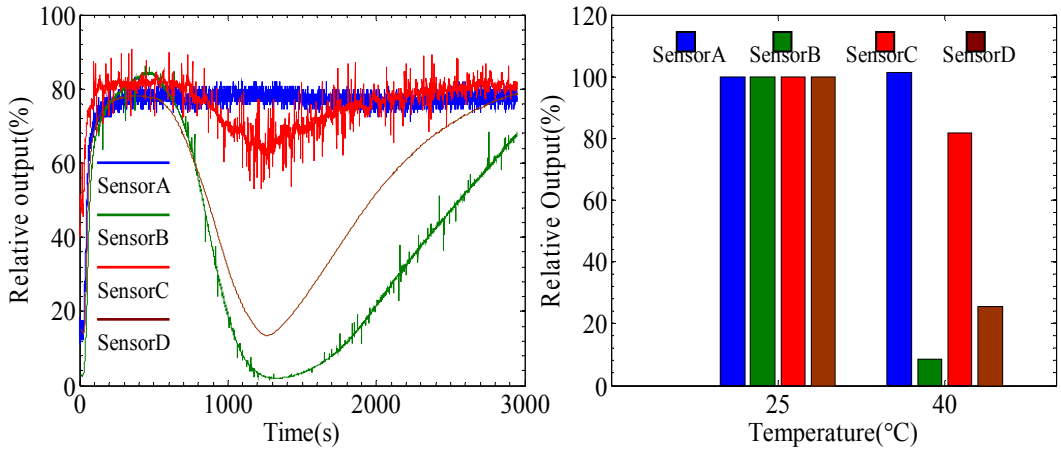

Figure 2.11 Sensor responses and normalized data for an NO_2 concentration of 5ppm.

Although the working temperature ranges of all evaluated metal-oxide sensors specify upper limits higher than 40°C, each of the sensors malfunctioned when the temperature exceeded 40°C. One possible reason for this result might be due to thermally induced air turbulence inside the chamber. According to the working mechanism of a metal-oxide sensor, a built-in heater is used to heat the sensor film to around 300°C, enabling the chemical reactions to occur on the sensing material. However, it is possible that the response of the metal-oxide gas sensors might, in some instances, be dominated by air turbulence and temperature effects rather than concentration differences [29]. The local gas circulation in the small stainless steel chamber at higher temperatures might be faster than the chemical reaction of NO_2

molecules at the solid-gas interface on the metal-oxide sensor, and thus gave very weak responses. For the sensor A, on the other hand, the chemical reaction of electrochemical sensor is based on a liquid-gas interface and worked properly above 40°C.

2.7 Gas selectivity

NO_2 and CO_2 were mixed together with N_2 balance gas in the gas mixing system. Three NO_2 concentrations of 10.0, 5.0 and 1.0ppm with 50,000 and 100,000ppm of CO_2 were chosen in our test. The total flow rate was controlled at 1000ccm and the measured temperature was set at 24°C. The humidity level was controlled at 50% and the chamber was purged with nitrogen gas prior to the testing. Fig. 2.12 (a) shows results of exposing the sensors first to 5ppm of NO_2 until the output stabilized and then to the mixture of 5ppm NO_2 and 50,000-ppm CO_2 starting at the 400ths. The sensors A, B, and C did not show any noticeable changes, and the sensor D showed a deviation of approximately 10%. Fig. 2.12 (b) shows the results when the sensors were exposed to 1ppm of NO_2 then mixed with 50,000 and 100,000ppm of CO_2 at the 400ths and 800ths, respectively. The response of the sensor B increases even though the sensor should stay near zero when the NO_2 concentration is below 5ppm (as shown in Fig. 2.5). The sensor D showed a deviation greater than 10% when it was exposed to mixtures of 1ppm of NO_2 and 50,000 and 100,000ppm of CO_2. The results show that the sensors function well even with the presence of CO_2 at NO_2 concentrations of 10ppm and 5ppm. At a lower concentration of NO_2 (1ppm), the sensors appeared to be affected by CO_2 gas, especially sensor B.

Similar conditions were used to test the selectivity in the presence of O_2. The total flow rate was controlled at 1000ccm, and the temperature was 24°C, with a humidity level at 50%. Three NO_2 concentrations (10.0, 5.0, and 1.0ppm) were used with three O_2 concentrations 50,000, 200,000, and 400,000ppm. The gas mixture with 50,000ppm O_2 and 5ppm NO_2 was supplied first and Fig. 2.13 (a) shows the results. The 5ppm concentration of NO_2 was detected by each sensor without much performance degradation with the addition of 50,000ppm O_2. Fig. 2.13 (b) shows when 200,000 and 400,000ppm O_2 were supplied with 1ppm of NO_2, the outputs of the sensors B and D were also affected by O_2, but the effects were less than when compared to similar results using CO_2 as the interference gas.

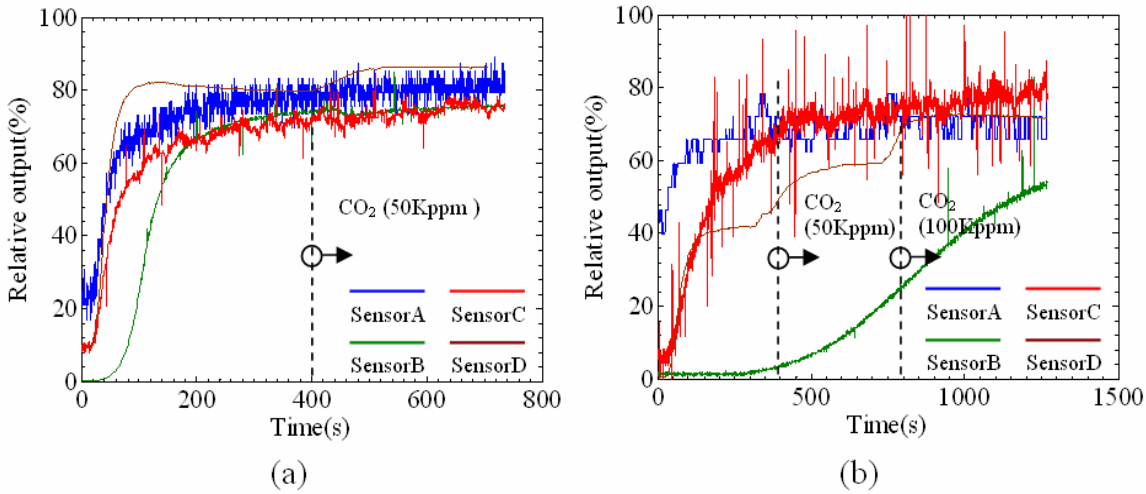

Figure 2.12 Sensor selectivity testing with CO_2 as the interference gas. Graphs are for (a) 5ppm of NO_2 with 50,000ppm of CO_2, and (b) 1ppm of NO_2 with 50,000 and 100,000ppm of CO_2.

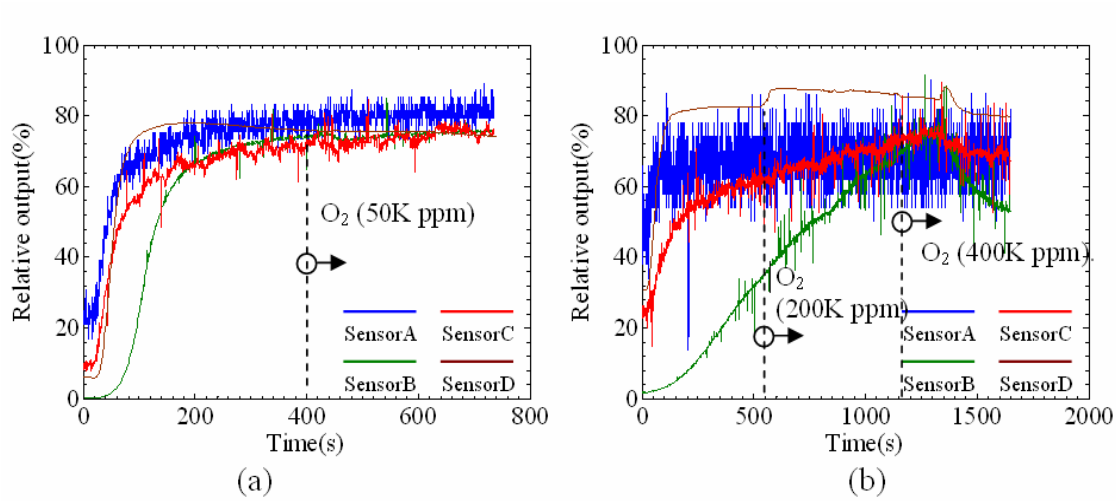

Figure 2.13 Results for sensor selectivity testing
(a) at 5ppm NO_2 with 50,000ppm of O_2, and
(b) at 1ppm NO_2 with 200,000 and 400,000ppm of O_2.

2.8 Conclusions

Three metal-oxide NO_2 sensors were evaluated and compared to an electrochemical NO_2 sensor as a reference. All metal-oxide sensors showed reasonable responses in the ranges provided by their respective datasheets; however, their performance was inferior to that of the electrochemical sensor. The sensors showed responses at levels out of their specified ranges, but with low accuracy. Humidity changes affected the performance of metal-oxide sensors. Therefore, recalibration of the sensors should be performed to compensate for the humidity effects. In investigating the temperature effects, the sensor responses were significantly affected, which might be due to thermally-induced air turbulence on the sensing material. In applications where the space is small and heated by nearby high-temperature sources, this may be a source for sensor signal deviation. To resolve the variations due to the humidity and temperature changes in practical cases, a compensation circuit or software using a

temperature and a humidity sensor is needed. Both sensors can be integrated along with the gas sensor. A block diagram to demonstrate the idea is shown in Fig. 2.14.

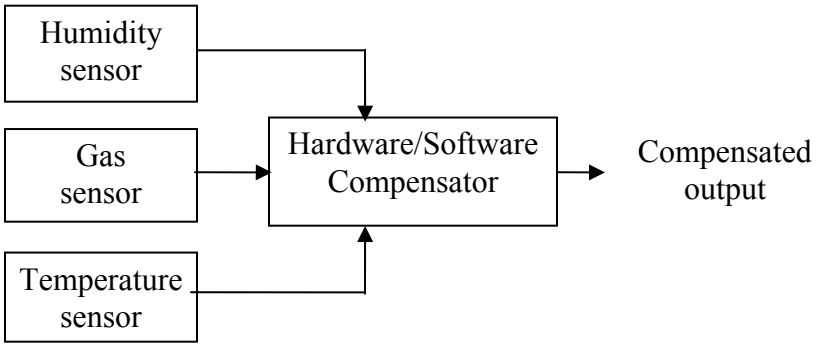

Figure 2.14 Block diagram of compensation systems.

The results of the selectivity tests showed that at lower target gas concentrations, the sensors had more difficulty providing accurate measurements in the presence of interference gases. Also, the tested NO_2 metal-oxide gas sensors are less affected by the presence of O_2 than by CO_2. Based on our results, provided that metal-oxide sensors have advantages of being small in sizes, low in costs and having long useful lifetimes, careful consideration should be exercised when choosing a sensor that will be suitable to a specific application.

CHAPTER 3

A MONITORING SYSTEM USING CO_2 SENSORS TO FIGHT SIDS

3.1 Motivation

Healthcare cost is an urgent issue globally. In the U.S., the cost for healthcare reached 16% of the Gross National Product in 2004, equaling US$1.88 trillion [30]. The costs for infant care are high due to the facts that the work is highly labor intensive. For healthy infants, SIDS is the most critical problem needed to be addressed. SIDS is defined as any sudden and unexplained death of an apparently healthy infant aged one month to one year [31-32]. According to the National SIDS/Infant Death Resource Center, SIDS is responsible for roughly 50 deaths per 100,000 births in the U.S. in 2004 (Fig. 3.1). Although the SIDS rate has been reducing, due to the awareness in parents and nurses, it is still too high for any family that suffers trauma and loss. Reducing the sudden death rate in infants by an effective monitoring and alarm system is a challenge for researchers.

Although the causes of SIDS have not been explained thoroughly in the literature, trouble with breathing has been known as the most common reason. Inborn factors such as disorders in the lungs or glands, respiratory infections, and improper sleeping positions are possible causes [31-32]. SIDS may happen to healthy infants without any identifiable physiological preconditions and it usually happens during sleep

without any warning signs, such as crying, struggling or suffering. Therefore, an effective respiratory monitoring system may be a good way for early warning to reduce SIDS risk.

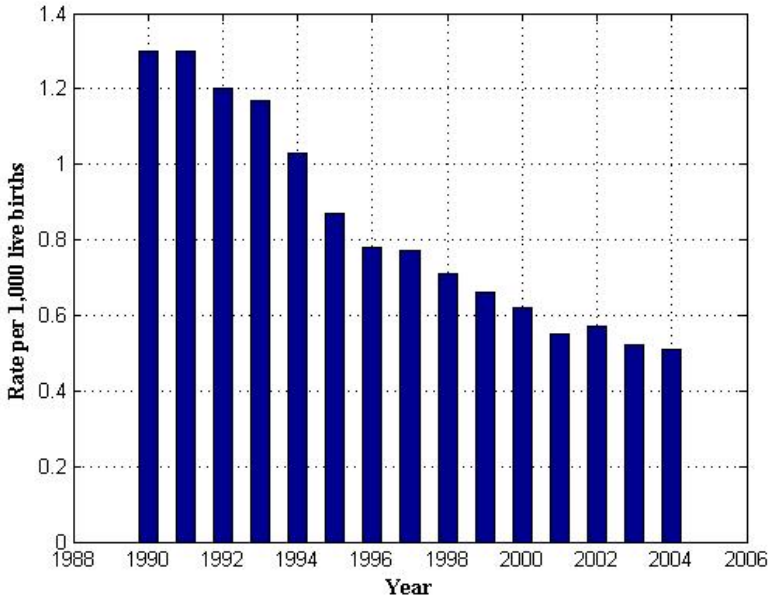

Figure 3.1 The SIDS rate in the U.S. from 1990 to 2004 [3].

There were some proposed infant monitoring systems, such as cardiopulmonary monitoring [33-36], vision monitoring [37], oxygen consumption monitoring [38] and multi-purpose monitoring [39]. Some approaches are invasive [33-36, 38-39], making both the infant and his/her parents uncomfortable. Some are not as effective as expected such as baby monitoring cameras due to the unrecognized signs of SIDS [37].

We propose a new method using CO_2 sensors placed in the crib around an infant to non-invasively monitor the exhaled air concentration variation from him/her. By monitoring the outputs of CO_2 sensors, we can detect if there is anything wrong with the

infant's respiration. The output data can be used to activate an alarm or logged for further diagnoses. With RFID integration, our system can be used to monitor a large number of infants in the nursery room of a hospital.

3.2 Methodology

3.2.1 System design

3.2.1.1 Crib design

Figure 3.2 Our crib design with CO_2 sensors implemented.
The sensors are connected to a processing circuit board.

Infants may take various sleeping positions and the exhaled air may spread in many directions due to air circulation. Thus, an array of CO_2 sensors is placed around the crib on the bars to provide sufficient information. A circuit board connected to the sensors is placed outside the crib to process the data (Fig. 3.2). The circuit board includes a wireless module for transmitting and receiving data. The module is away from the infant to ease parents' concern of electromagnetic waves from the wireless module. A drastic variation of CO_2 concentration will produce an abrupt change in sensor outputs and the processor will be activated to send out an alarm signal. With the RFID approach, an identification (ID) signal of the infant will be sent out to correlate the sensing/alarm signals with the ID. This will significantly reduce the labor costs and time. The sensor data and ID can be pulled periodically for monitoring and calibration. The stored vital sign data can help doctors to identify or diagnose any potential health problems in infants.

3.2.1.2 System overview

Fig. 3.3 shows the tag system diagram. Each sensor is mounted inside the bar of the crib and connected to the processing board. A battery is used as power supply. The wireless transmitter is at the output of an analog multiplexer. Commercial baby monitors, such as a webcam or microphone, can be also connected to the multiplexer. The receiver separates the signals by a demultiplexer for multi-modality monitoring.

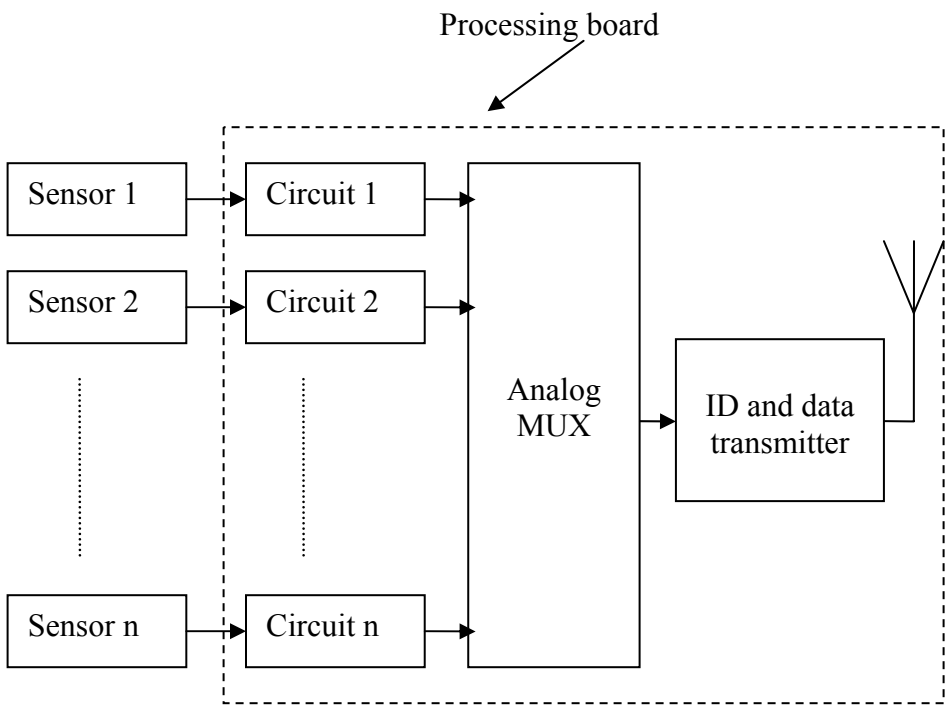

Figure 3.3 Block diagram of the transmitter.

The sensor circuit has a two-stage amplifier. The first stage is for buffering and is followed by a differential amplifier. An analog multiplexer or an AND gate, depending on the application, multiplexes the signals in the time domain. For simple monitoring, an AND gate provides the functionality of an alarm signal. The ID of infant will be sent out along with the alarm if the outputs from sensors are lower than the threshold. A comparator for each sensor is implemented after the two-stage amplifier and the threshold is adjustable for different environmental conditions. For some infants who have already suffered from respiratory inborn disorders, we might need to examine the CO_2 concentration in their exhaled air regularly and frequently. Besides the alarm signal, we multiplex and transmit all sensor signals along with the infant's ID for

diagnosis purposes. At the receiver side, an alarm will be triggered as soon as an alarm is sent by the identified transmitter while the server starts to record the data (Fig. 3.4).

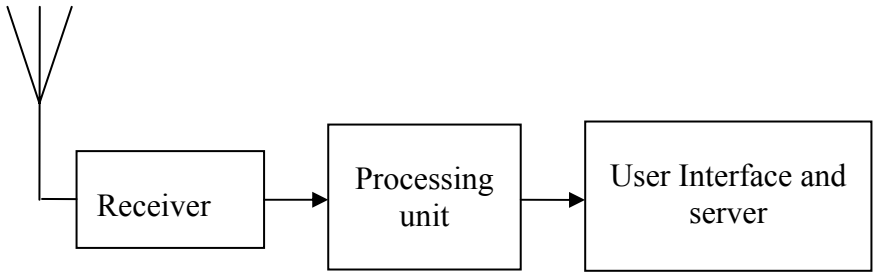

Figure 3.4 Block diagram of the receiver.

3.2.1.3 CO_2 sensor

A human's exhaled air roughly consists of 79.5% nitrogen (N_2), 16.5% oxygen (O_2) and 4% CO_2 [40]. The CO_2 is then diffused quickly to a much lower concentration between 2000ppm and 5000ppm in the air [41]. Therefore, the working range of our CO_2 sensor has to cover the range from 2000 to 5000ppm of CO_2. The exhaled air has a saturated humidity, even after diffusion, the relative humidity (RH) of the air composition is still high. This might introduce errors in the sensor performance, requiring us to design the system to work in a wide range of humidity. Furthermore, a short response time sensor is needed for real time monitoring purposes.

There are commercial off-the-shelf CO_2 sensors in the market with various sensing principles, such as electrochemical based, infrared based and metal-oxide based sensors. According to our previous sensor review results [42], we found that

electrochemical based sensors give the best performance but the short lifetime prohibits the use. Infrared based sensors are sensitive but bulky in size and more costly [1]. With the goal to achieve a low-cost and long-term system, we chose metal-oxide based CO_2 sensors. We do realize the shortcomings of metal-oxide sensing, such as humidity and temperature dependence. We have carried out testing and calibration experiments that will be described in later sections.

3.2.2 RFID transmission

As we mentioned above, this kind of system can be used for one infant at home or a large number of infants in the hospital nursery room. Obviously, for home uses with one infant, we do not need to use RFID to take its advantages. The transmitter will send the alarm signal to warn the parents and/or the CO_2 sensor data to a recording server. The data can also be locally logged into a memory card. The receiver for monitoring purposes should be compact and mobile for the convenience to caregivers.

A monitoring system with integration of RFID is needed for a hospital nursery room full of infants to quickly identify individuals. A block diagram of the system architecture is shown in Fig. 3.5.

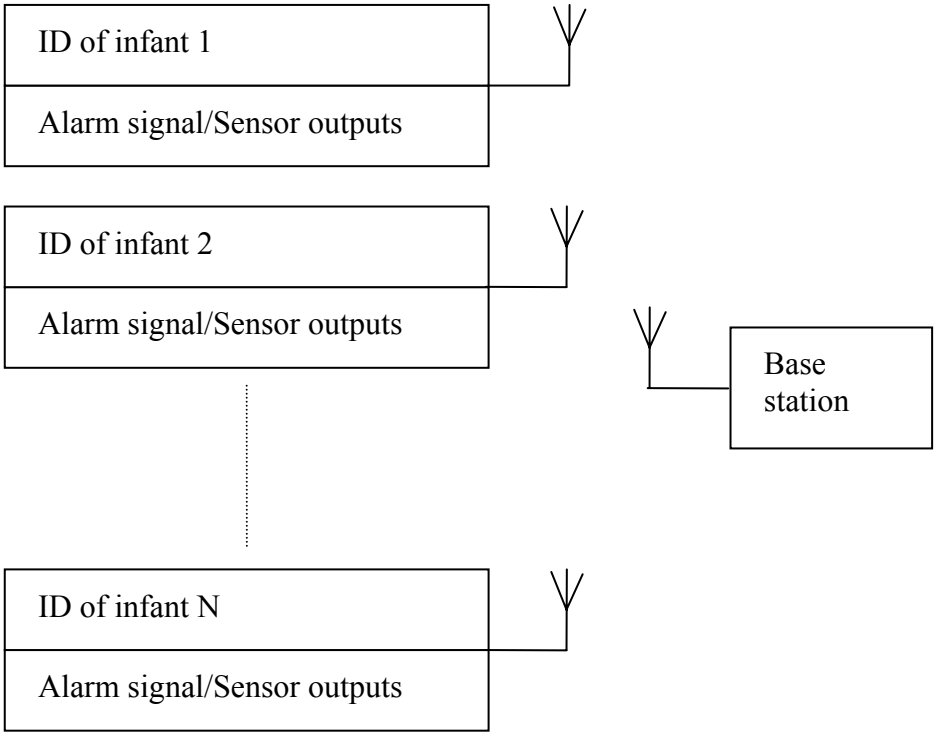

Figure 3.5. Block diagram of the system used in a hospital nursery room.

The passive RFID tags can be utilized to identify the infant, however, the power consumption for the sensor (250mW) [43] is much higher than the transmitted power in a typical active RFID system which is around 1mW [44-45] and the nursery room can provide sufficient powers. Thus, instead of using a traditional passive RFID, we chose an active approach which gives a longer communication distance and operation flexibility.

One concern for the monitoring system is data collision. In traditional passive RFID systems, the reader collision problem has been a big challenge for researchers. To minimize collision, several solutions have been proposed, such as Colorwave Algorithm

[46], HiQ Algorithm [47], Pulse Protocol Algorithm [48], Frequency Division Multiple Access (FDMA), Time Division Multiple Access (TDMA), Code Division Multiple Access (CDMA) and Carrier Sense Multiple Access / Collision Avoidance (CSMA/CA) methods [48]. Although our active system has only one reader, we face the collision issues among transmitters when they are trying to send signals to the base station simultaneously. Possible anti-collision methods for passive RFID systems can be implemented for our system. For a full system, TDMA is a good choice since we can partition alarm transmission and recording periods efficiently if the data burst rate is sufficiently high. For a simple monitoring system, the transmitter sends out the alarm signal along with the infant ID only when the sensor outputs give improper values. Normally, the tag will be in the sleeping mode to save energy. Nevertheless, two different transmitters might transmit at the same time, causing collision. CSMA/CA is a relatively simple method to overcome collision in this case. Each transmitter has listening functionality which can be used for the Listen Before Talk (LBT) and the Delay Before Talk (DBT) mechanisms [49].

In our proposed system, each transmitter is in the sleeping mode and will be awakened only when its sensor circuitry sends an alarm signal or the base station sends a request to receive sensory data. The alarm signal of each infant is the ID designated for the crib. The sensory data sent by the request of the base station is in packages containing both sensor ID and sensor signal. First, the base station will listen for any alarm signal, if there is no alarm it will transmit the request to a certain crib. The RFID listens and if the ID matches, the transmitter will wake up and send out the sensory data.

The base station collects the data and records. The sensory data package takes a small time slot and then the reader listens to alarm signals again. If there is no alarm, the reader will pull the second ID to request data from the second crib. This process repeats until all cribs are recorded. The caregivers have to physically reset alarms, if the reader receives them.

If something happens with a specific infant, the transmitter will listen first before sending to avoid collision. The alarm will be sent continuously until the next listening timeslot of the base station. If another crib is sending an alarm signal, it will wait until the medium is free. When the base station obtains an alarm signal from a crib, it will activate an alarm and send request to that crib. That crib will stop sending the alarm signal and send the sensory data. The data pulling order then is changed. The alarm in the base station can only be cleared by staff. To avoid collision between two transmitters as one is transmitting sensor data while the other one is transmitting alarm signal, we will use two RF channels.

3.3 Experiment and Results

3.3.1 Circuit setup

We chose active transmission for proof-of-concept demonstration of monitoring infant respiration. The main goals are to demonstrate the sensor performance, feasibility of monitoring respiration activities using CO_2 sensors, and wireless communication. We used two individual transmitter tags at 914 MHz and 433 MHz [50] and one common receiver. The receiver talks to two transmitters at the same time. The identification is

encoded in the operating frequency. Circuits were designed and assembled with two-layer printed circuit boards (PCB). Fig. 3.6 shows the schematic and assembled PCB of the transmitter.

The operational amplifiers (OPAMPs) we used are the TI TLC271. The first potentiometer is used to create a differential voltage. The difference in voltage is then amplified by an OPAMP with a gain factor of

$$A_V = \frac{R_2}{R_1} = \frac{200k\Omega}{10k\Omega} = 20. \tag{3.1}$$

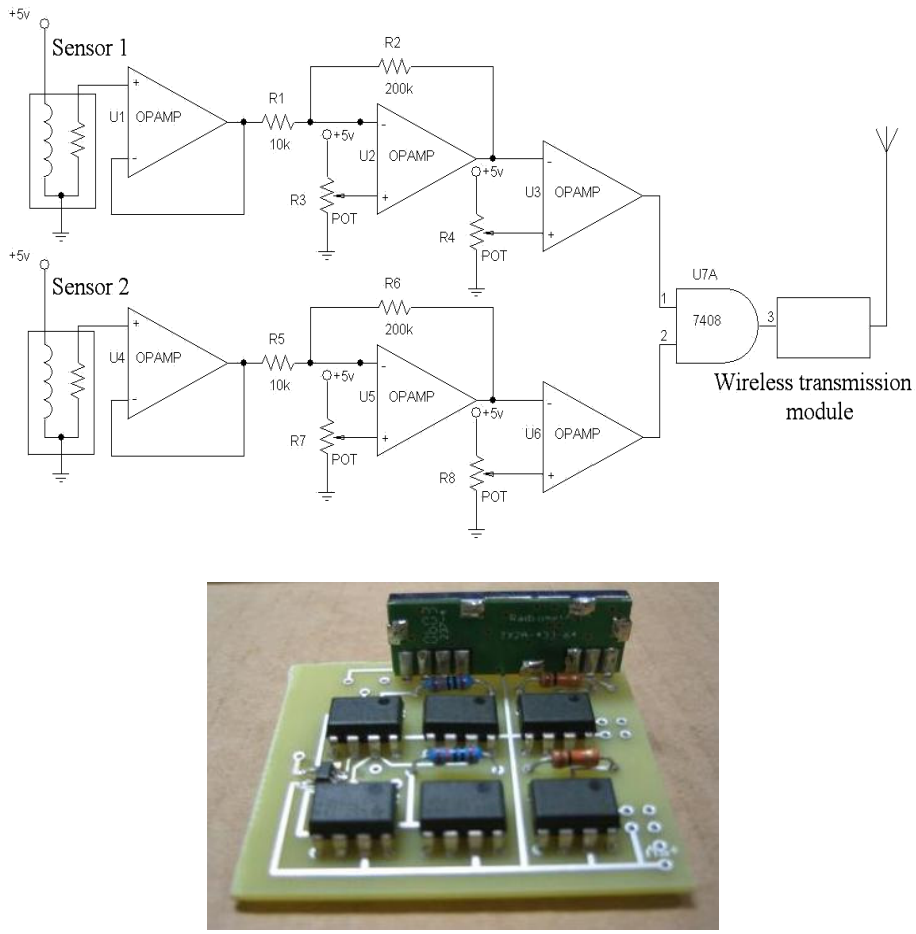

Figure 3.6 Schematic and assembled PCB of the transmitter.

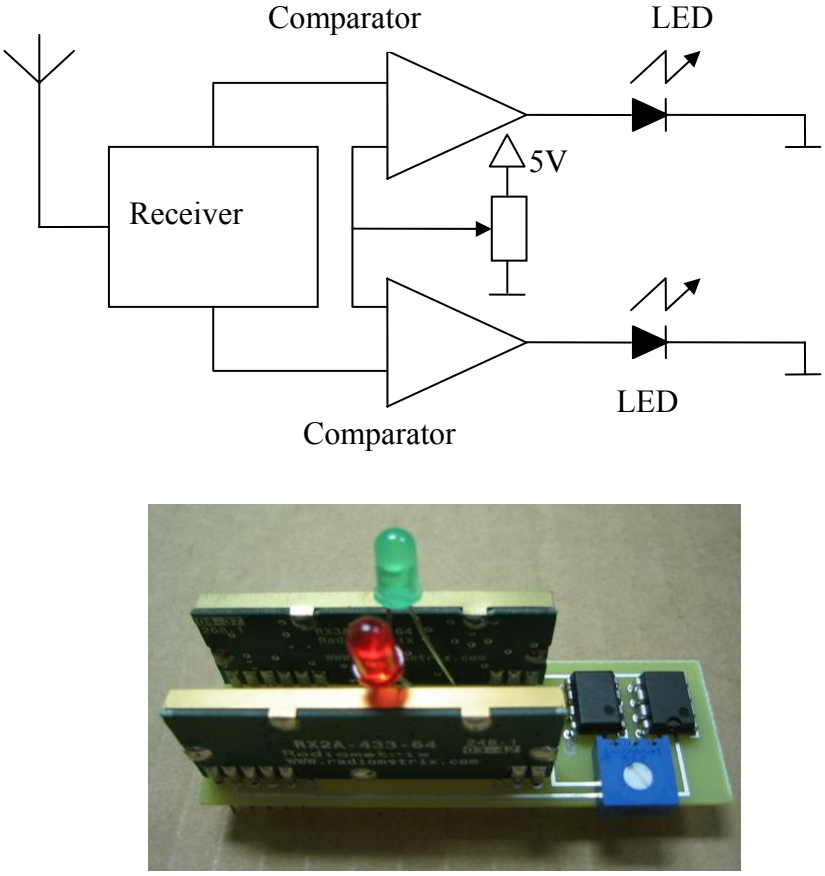

Figure 3.7 Schematic and assembled PCB of the receiver.

The second potentiometer, after the buffer and differential amplifiers, is used to set a threshold voltage. When the sensor signal is lower than the threshold, the third OPAMP, working as a comparator, will give a 5V output as the input to the AND gate. If responses from all sensors show low concentrations of CO_2, the output of the AND gate is set to 5V and sent to the wireless module. One transmitter uses *Radiometrix* TX3A&RX3A working at 914 MHz and the other one uses TX2A&RX2A working at 433 MHz [50]. The receiver receives data from two transmitters and processes them separately with two comparators using OPAMPs. When a transmitter sends an alarm

signal, the output of the comparator will be 5V and turn on an LED as an alarm indicator (Fig. 3.7). The alarm algorithm is simplified in this study. Designed experiments are needed to determine how to set the thresholds in different sensors around the crib and how to process the data to trigger the alarm.

3.3.2 Sensor tests

As we mentioned in previous chapters, gas sensor characterization depends on many environmental parameters. We chose Figaro *TGS4161* CO_2 sensors [43] and characterized them in various environments. A gas mixing system, *Environics* Series 4000, was used to generate required concentrations of CO_2 in a composition with other gases such as N_2 and O_2. The equipment provides humidity control. The air flow from the gas mixing system was enclosed on the sensor by a home-made stainless steel chamber. Because the temperature in the infant room does not change significantly so we chose not to test the temperature variations. The sensor test was done in the class 10,000 cleanroom and inside a fume hood as we mentioned in chapter 2.

3.3.2.1 Sensitivity test

The CO_2 concentrations chosen for sensitivity tests were 500, 2000, 5000 and 8000ppm with a gas flow rate of 1000ccm at the room temperature (24°C) and zero humidity. The tests were done by first purging the chamber with 100% N_2 and then supplying CO_2 diluted in N_2 for measurement. Fig. 3.8 shows the output voltage from the sensor with various CO_2 concentrations.

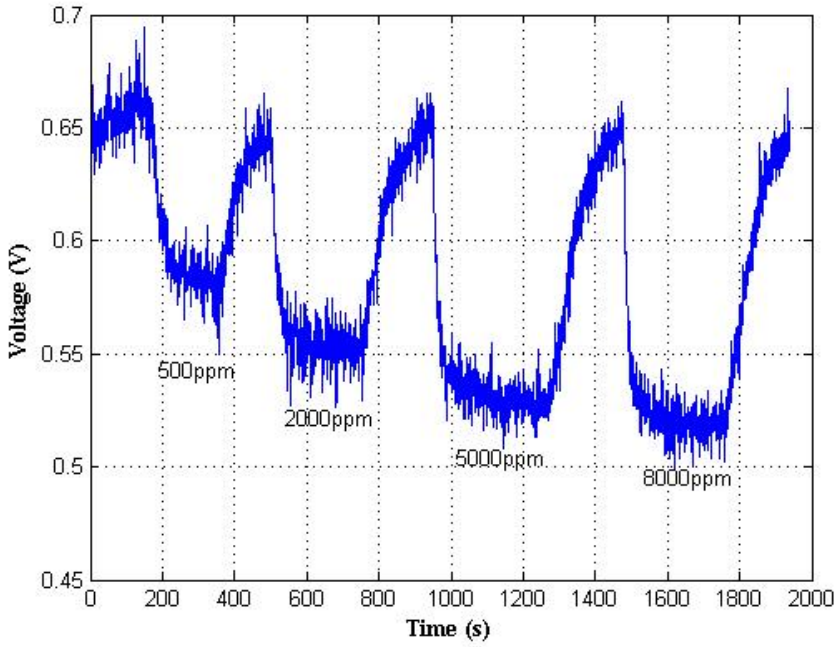

Figure 3.8 Sensitivity test results.

The differential amplifier was used to magnify the change in voltage. Fig. 3.9 shows the signal after two stages of amplifiers with various concentrations of CO_2. The sensitivity is about 0.2mV/ppm in the range of 500-5000ppm. The rise and fall response times are defined as the times for the output voltage to reach 90% of its final value or drop to 10% of its stable level, respectively. The respective rise and fall response times are in ranges of 5-15s and 30-50s for four tested concentrations. In our system, we pay attention at the fall time from 2000-5000ppm of CO_2 to ambient CO_2 densities of 350-750ppm [41]. In Fig. 3.9, the fall times from 2000ppm and 5000ppm to 500ppm of CO_2 are 10 and 15 seconds, respectively. The response times are too long, limited by the

metal-oxide sensing mechanism, for monitoring respiration. Instead of detecting the absolute values; we use the drop rate in the first two seconds.

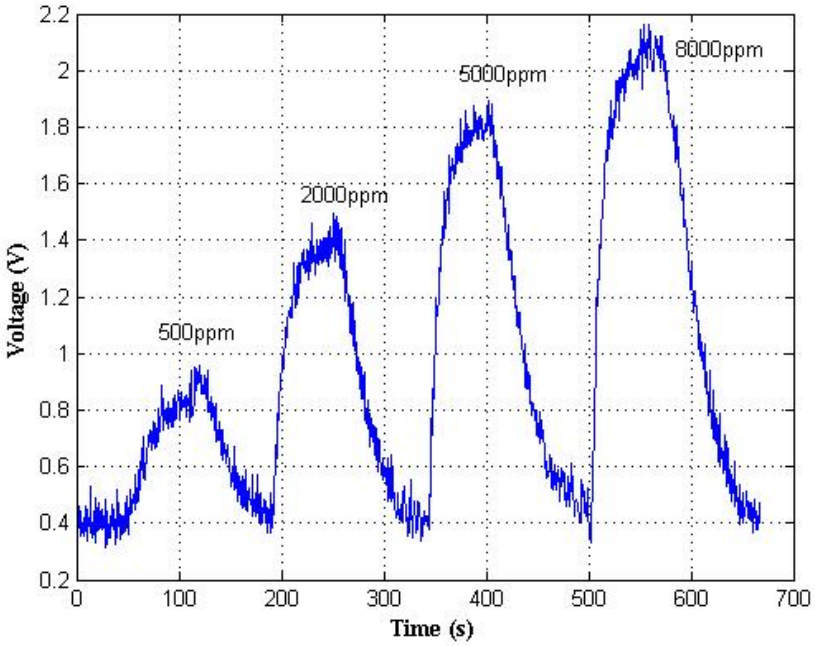

Figure 3.9 Processed sensor signals.

3.3.2.2 Selectivity test

According to the datasheet from the manufacturer, the *TGS4161* sensor signal is only affected by CO_2 and other gases like CO and H_2 will have no effect.

In our application the CO_2 sensor will operate in an environment with the presence of N_2 and O_2. Therefore, the selectivity tests were carried out with a composition of N_2 as the balance gas, 16.5% O_2 and different concentrations of CO_2 at 40% RH. The response was then compared with the one obtained without the presence

of O_2. Fig. 3.10 shows that the signal with the presence of O_2 is about 0.25V greater than the one without O_2. Thus, the threshold voltage setting has to be adjusted.

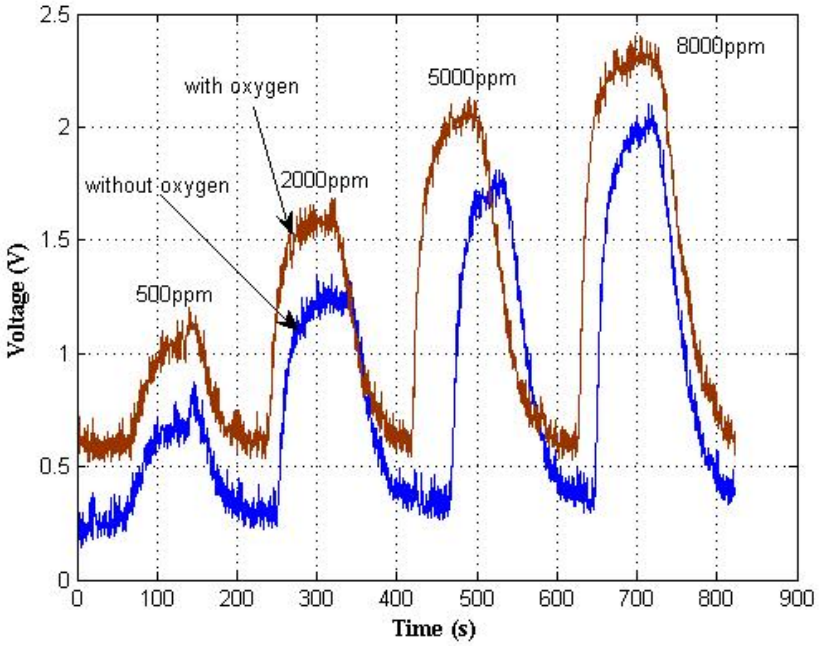

Figure 3.10 Responses of the composition with 16.5% O_2 and the one without O_2.

3.3.2.3 Humidity dependence test

Metal-oxide sensors usually are sensitive to humidity since the water molecules prevent the binding of target gas to the sensing membrane [42]. The humidity dependency quoted in the manufacturer datasheet does not apply for our conditions. In our design, amplifiers will also magnify the variations due to the humidity effects. We carried out various tests by fixing the RH level in the gas mixing system first, purging the chamber with 100% N_2 as the balance gas and then supplying CO_2 with different concentrations for measurement. The process was then repeated with several levels of

humidity. Results showed that with small changes in RH, the sensor signals stayed stable. Test results at 40% RH and 90% RH are shown in Fig. 3.11.

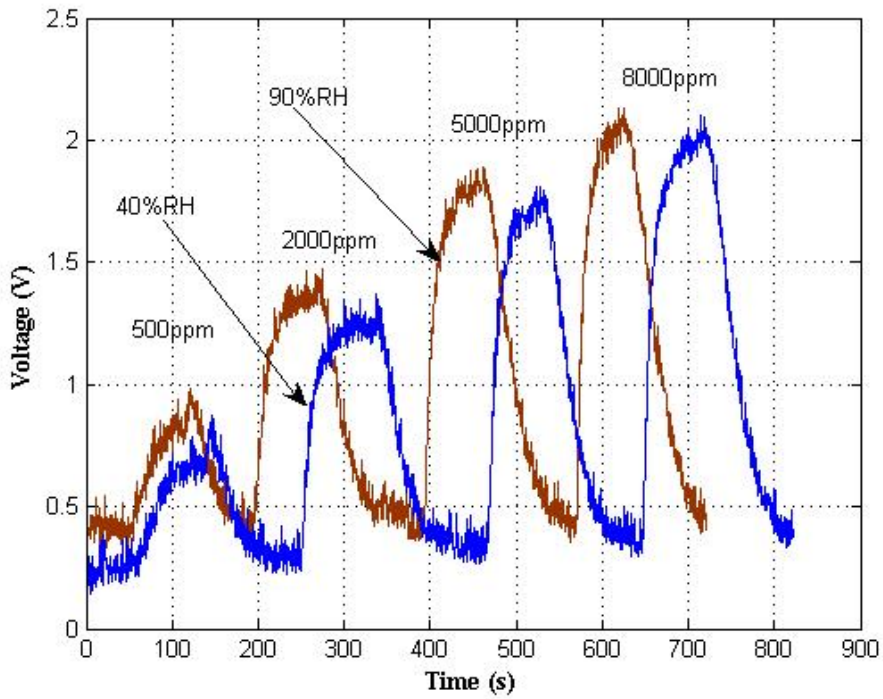

Figure 3.11 Responses at 90% RH and 40% RH.

In Fig. 3.11, the variations are 23%, 7%, 5% and 2% for 500, 2000, 5000 and 8000ppm of CO_2, respectively. Therefore, the threshold needs to be adjusted with different values of relative humidity.

3.3.2.4 Sensor test with breaths

We also carried out the performance of the sensors in practical conditions by breathing near the sensor at different distances. First, the sensor was placed in the air with the presence of ambient CO_2 (350-750ppm), and then enclosed by the chamber with pure N_2. After that, we removed the chamber and tested the sensor by breathing

and withholding on it at different distances (Fig. 3.12). As we see in Fig. 3.12, the output voltage when we breathe on the sensor is higher than the one when we withheld our breath. Furthermore, it depends on the distance between the sensor and the person who breathed on it.

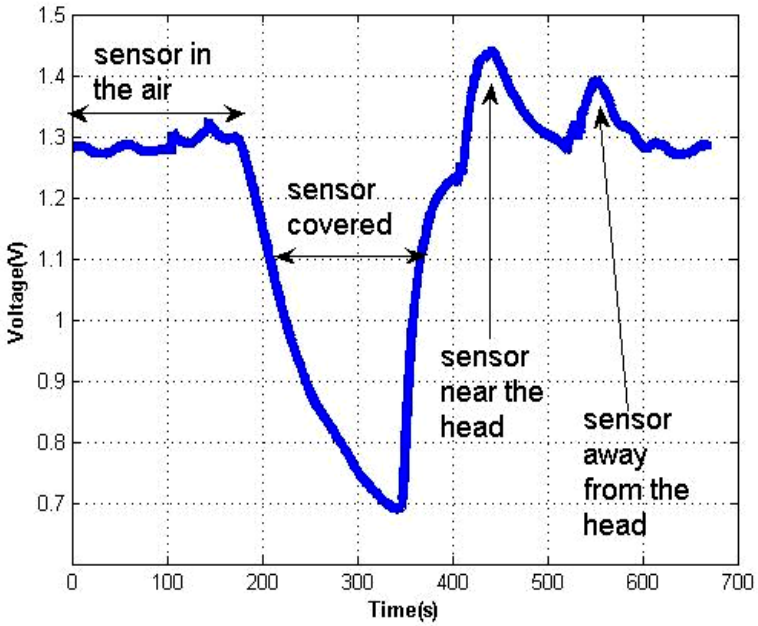

Figure 3.12 Sensor responses with different sensor locations.

3.3.3 RF transmission test

The wireless module we used has a nominal output power of 1mW and an in-building transmission distance of 75m [50]. We made coil antennae and tested the transmission capability with various polarizations of the antenna (Fig. 3.13) in a narrow hallway and in different sizes of rooms as well. Results show that the received powers are always sufficient to correctly trigger the alarms and record the sensor signals.

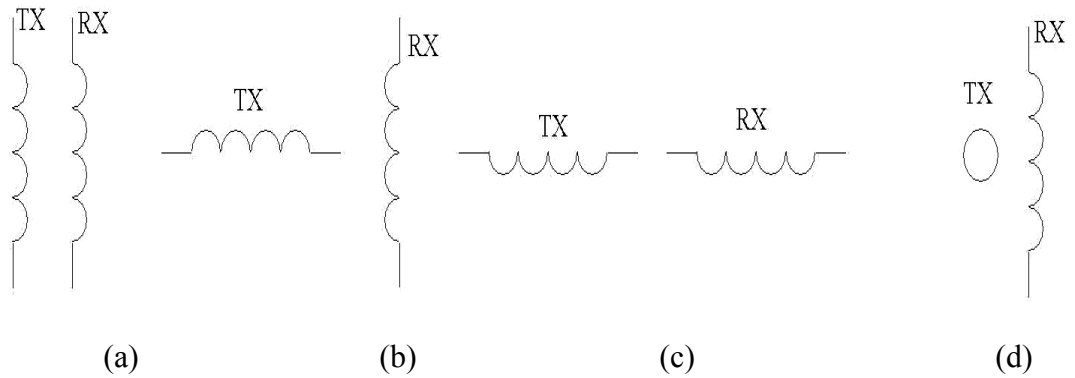

Figure 3.13 Different antenna polarizations. (a) Both in vertical polarization. (b) One in vertical and one in horizontal polarization. (c) Both in horizontal polarization. (d) Antennae are in cross-polarization.

3.3.4 System tests

Our sensor system was tested by breathing near the sensors with a distance of 50cm for 30 seconds and then withheld our breathing for 20 seconds. Various head directions and positions were tested. The receiver was placed at different distances and in another room. A few seconds after we started the tests, the LED was turned on. The tests were repeated with two people using two sets of sensors/transmitter. The results were the same.

3.4 Discussions

There are some improvements needed. One of the critical elements is the sensor performance, especially the uniformity among devices. During the sensor tests, we noticed that there was a slight variation in the outputs between two different sensors and the outputs from a certain sensor were not repeatably identical for the same concentration of gas. The output signals also change over time for the same

concentration. Although those changes are relatively small, it may issue false alarms and desensitize caregivers' attention. A sensitive yet stable sensor with performance uniformity will be an ideal choice. For the humidity dependence issue, it is almost unavoidable for metal-oxide sensors due to the fact that water vapor hinders the chemical reaction between the target gas and the sensing material [42]. It can be resolved by adding a humidity sensor in our sensor boards. The threshold voltage will be accordingly adjusted by a feedback loop.

Our proposed system is also suitable for integration of multi-modality sensors. Besides CO_2 sensors, we can include patch-type sensors, such as blood pressure sensors, pulse sensors, heart rate sensors, and clamp-type sensors, such as optical pO_2 sensors and glucose sensors. Each sensor, with its own ID, can be connected to the processing board with a wireless module. For this purpose, multiple channel information will require high data rates for quick transmission and response. A higher carrier frequency, such as 2.4GHz, with more efficient modulation, such as QPSK, then is needed.

3.5 Conclusion

We have proposed a new approach for an infant monitoring system using multiple CO_2 sensors. The system provides advantages such as lower costs, non-invasive sensing mechanism, and away-from-the-infant wireless transmission. They will attract caregivers and play an important role in the campaign against SIDS. A proof-of-

concept system has been designed, assembled and tested. We have identified some practical issues and showed a method to integrate RFID technology with sensors.

CHAPTER 4

A GAS SENSORS SEARCHING SYSTEM

4.1 Motivation

As we mentioned in previous chapters, there are a variety of COTS sensors for any specific gas. How to choose a particular sensor for a user's application becomes complicated. Therefore, a search engine with information about all available sensors and their specifications is an urgent need. It will reduce much time for users. With this kind of system, instead of opening each sensor datasheet to read the specifications, they only need to declare the target gas, sensor type and sensing range and get the result.

Because the database is extremely big, it will be better if we can develop a web based search engine so that the database will be stored in the server. Each user needs only an account and password to access to the search part in the website.

The evaluation results we got in Chapters 2 and 3 will be added to the specifications of each sensor. Ideally, we want to have all the available sensors to be tested, but it is a huge task which needs many universities and corporations to contribute.

4.2 Implementation

We chose the Active Server Page (ASP) in connection with the Microsoft Access database to implement the web based search engine.

4.2.1 Database

First, we created a Microsoft Access table with the following parameters: Company, Web, Type, Minimum concentration, Maximum concentration, Max_range, Sensing Gas, Temperature, Humidity, Resolution, Accuracy, Linearity, Response time, Cell life, Input voltage, Current consumption, Power consumption, Temperature dependent, Pressure dependent, Long term stability, Weight and Datasheet. This file is sensor.mdb which stores basic information about all sensors we have. Description of each parameter is described in Table 4.1

Table 4.1 List of parameters, meaning and format

Parameter name	**Meaning**	**Format**
Company	Company's name	Text
Web	Company's website	Text
Type	Sensing principle of sensor	Text
Minimum concentration range	Minimum concentration sensor can sense	Text
Maximum concentration range	Maximum concentration sensor can sense	Text
Max_Range	Number converted	Number
Sensing Gas	The gas type that the sensor can sense	Text
Temperature	The working temperature	Text

Table 4.1 (Continued)

Parameter name	Meaning	Format
Humidity	The working humidity	Text
Resolution	The resolution in concentration	Text
Accuracy	The accuracy of the output	Text
Linearity	The linearity of the output graph	Text
Response time	The time to reach T90 or a specific level	Text
Cell life	The lifetime of the sensor	Text
Input voltage	The range of the input voltage	Text
Current consumption	The current consumption	Text
Power consumption	The power consumption	Text
Temperature dependent	The shift rate when temperature changes	Text
Pressure dependent	The shift rate when pressure changes	Text
Long term stability	The shift rate after a specific time	Text
Weight	The weight of sensor	Text
Datasheet	The link to pdf file supplied by company	Text

The datasheet pdf files of sensors supported by manufacturers were also downloaded and stored in one directory in our server. The link directed to each file will be placed as the last specification in the result page.

An Access table storing usernames and passwords was also created. It includes only two columns: User and Password. Only registered users with accurate password can access our search engine.

4.2.2 ASP files

ASP files were programmed to get data from the file sensor.mdb. The users will have to choose specific values in three drop menus which are Type, Sensing Gas and Maximum Concentration. The search page interface which is programmed in search.asp file is shown in Fig. 4.1.

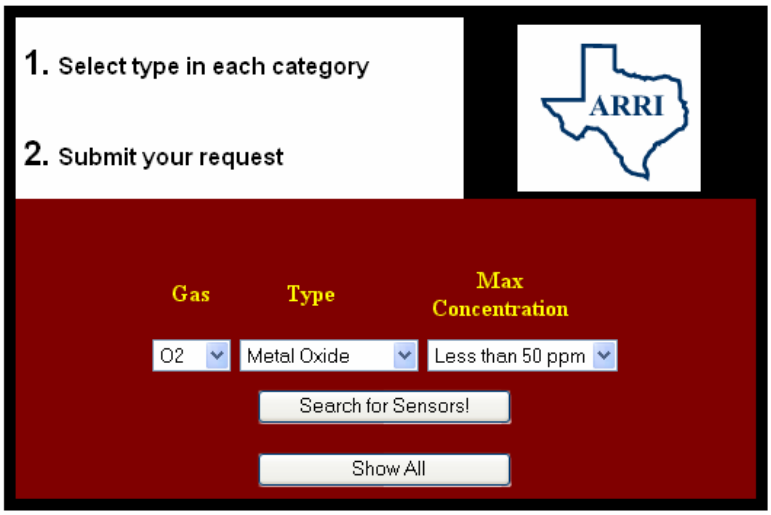

Figure 4.1 A snapshot of the search engine interface

There are two main ASP files to implement our searching job. Showall.asp is the file to show the whole database we and sensor.asp is the file to show sensors with some specific values that the users want to see. For example, if we choose CO_2,

Infrared, 100000ppm and click “Search for Sensors” we will see result as shown in Fig. 4.2.

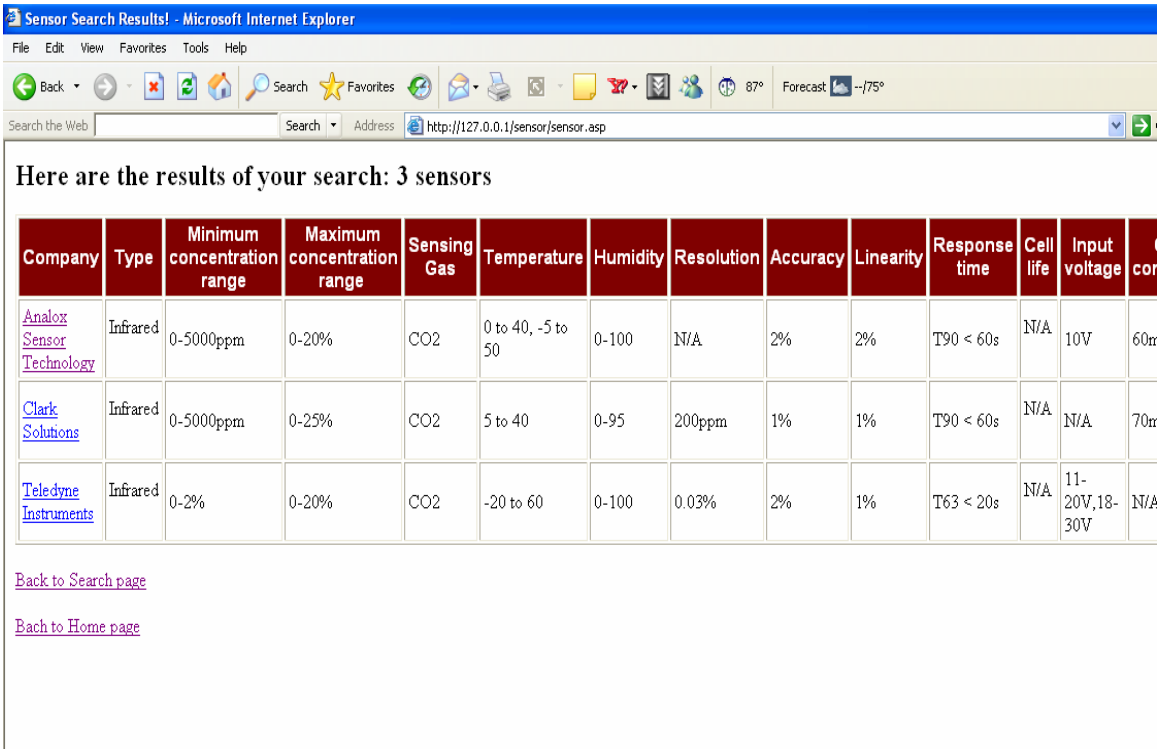

Company	Type	Minimum concentration range	Maximum concentration range	Sensing Gas	Temperature	Humidity	Resolution	Accuracy	Linearity	Response time	Cell life	Input voltage	co
Analox Sensor Technology	Infrared	0-5000ppm	0-20%	CO2	0 to 40, -5 to 50	0-100	N/A	2%	2%	T90 < 60s	N/A	10V	60m
Clark Solutions	Infrared	0-5000ppm	0-25%	CO2	5 to 40	0-95	200ppm	1%	1%	T90 < 60s	N/A	N/A	70m
Teledyne Instruments	Infrared	0-2%	0-20%	CO2	-20 to 60	0-100	0.03%	2%	1%	T63 < 20s	N/A	11-20V,18-30V	N/A

Figure 4.2 A specific search result.

If we choose “Show All”, all the sensors with information will be shown. For the “Maximum concentration range” column, a sort function was added so that we can sort the maximum concentration from “high to low” and “low to high” (Fig. 4.3).

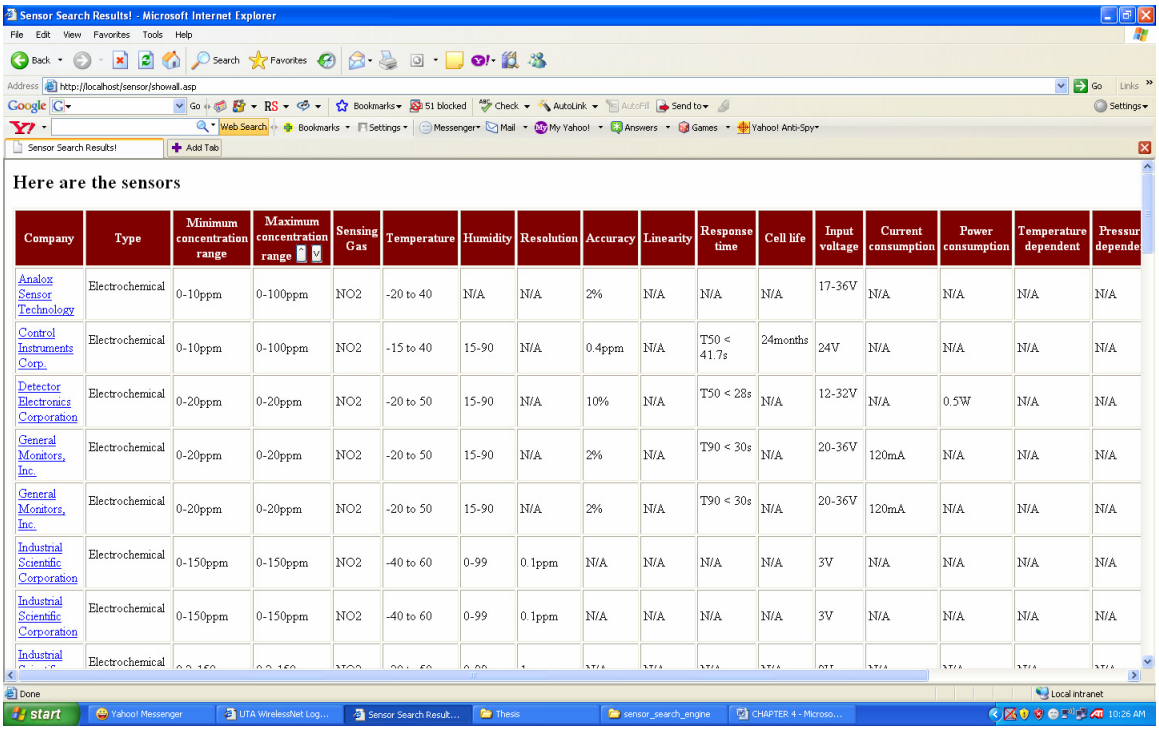

Here are the sensors

Company	Type	Minimum concentration range	Maximum concentration range	Sensing Gas	Temperature	Humidity	Resolution	Accuracy	Linearity	Response time	Cell life	Input voltage	Current consumption	Power consumption	Temperature dependent	Pressur depende
Analox Sensor Technology	Electrochemical	0-10ppm	0-100ppm	NO2	-20 to 40	N/A	N/A	2%	N/A	N/A	N/A	17-36V	N/A	N/A	N/A	N/A
Control Instruments Corp.	Electrochemical	0-10ppm	0-100ppm	NO2	-15 to 40	15-90	N/A	0.4ppm	N/A	T50 < 41.7s	24months	24V	N/A	N/A	N/A	N/A
Detector Electronics Corporation	Electrochemical	0-20ppm	0-20ppm	NO2	-20 to 50	15-90	N/A	10%	N/A	T50 < 28s	N/A	12-32V	N/A	0.5W	N/A	N/A
General Monitors, Inc.	Electrochemical	0-20ppm	0-20ppm	NO2	-20 to 50	15-90	N/A	2%	N/A	T90 < 30s	N/A	20-36V	120mA	N/A	N/A	N/A
General Monitors, Inc.	Electrochemical	0-20ppm	0-20ppm	NO2	-20 to 50	15-90	N/A	2%	N/A	T90 < 30s	N/A	20-36V	120mA	N/A	N/A	N/A
Industrial Scientific Corporation	Electrochemical	0-150ppm	0-150ppm	NO2	-40 to 60	0-99	0.1ppm	N/A	N/A	N/A	N/A	3V	N/A	N/A	N/A	N/A
Industrial Scientific Corporation	Electrochemical	0-150ppm	0-150ppm	NO2	-40 to 60	0-99	0.1ppm	N/A	N/A	N/A	N/A	3V	N/A	N/A	N/A	N/A
Industrial	Electrochemical															

Figure 4.3 All information about available sensors.

The final job is to publish this webpage. A Windows Server is needed. The whole folder can be placed in the server and our webpage will be ready to access.

CHAPTER 5

CONCLUSIONS

There are still a lot of issues that we need to address when we choose a gas sensor for a particular system. According to our evaluation results, electrochemical based sensors have better performance than metal-oxide sensors. Nevertheless, their lifetime of around six months prohibits the uses. Since the price of a metal-oxide based sensor is much lower than other types, it has been widely used in many applications.

A big problem for metal-oxide based sensors is the humidity dependence issue [42]. They are usually sensitive to humidity since the water molecules prevent the binding of the target gas to the sensing membrane. We have proposed a calibration method in Chapter 2 to solve this but the fact is with each sensor, we have to evaluate it first to figure out the humidity dependence factor before we can use that for a feedback loop. It will take much time and cost a lot.

Ideally, if we can improve the lifetime of electrochemical based sensors or we can minimize the humidity dependence issue in metal-oxide based sensors, we do not need to do much evaluation and calibration. This will be a fertile area for researchers.

The gas sensors will also find uses to sense gases in liquid. The fish in a pond will suffer if the concentration of oxygen in the water is too low. For metabolism in a human body, blood is the medium to carry oxygen from the lung to organs and carbon

dioxide form organs to lung. Therefore, monitoring those gases in our blood stream can inform us about our health status. There have been many products in the market for this purpose, but they are usually based on infrared approaches, they are expensive and bulky in size. It will be much better if we can have micro sensors that can be implanted to human bodies to monitor those factors and communicate with a base station outside which is integrated in a watch-type device or cell phone. This will be a long-term goal for researchers.

REFERENCES

1. Chou, J., Hazardous Gas Monitors: A Practical Guide to Selection, Operation, and Applications, *McGraw-Hill Professional*, 1999.

2. Bogue, R., "The UK gas sensor industry", *Sensor Review*, Vol. 21, No. 2. pp. 98-103, 2001

3. Sensors Magazine http://www.sensorsmag.com/sensors/

4. Ihokura, K. and Watson, J., The Stannic Oxide Gas Sensor: Principles and Applications, *CRC Press Inc*, 1994.

5. Kocache, R., "Gas sensors", *Sensor Review*, Vol. 14 No. 1, pp. 8-12, 1994.

6. Watson, J., Ihokura, K., and Coles G., "The tin dioxide gas sensor", *Measurement Science and Technology*, Vol. 4, pp. 711-719, 1993.

7. Moseley, P., "Solid state gas sensors", *Measurement Science and Technology*, Vol. 8, pp. 223–237, 1997.

8. Bârsan N, Weimar U, "Understanding the fundamental principles of metal oxide based gas sensors; the example of CO sensing with SnO_2 sensors in the presence of humidity", *Journal of Physics: Condensed*. Matter 15, pp. R813–R839, 2003.

9. Meixner, H., Lampe, U., "Metal oxide sensors", *Solid-State Sensors and Actuators, and Eurosensors IX*. Transducers '95. The 8th International Conference on**,** Vol. 1, pp. 903-904, 1995.

10. Usage of TGS Sensors for Toxic and Explosive Gas Leak Detectors, Figaro Inc.

11. Tang, Z., Wong, D.T.W., Chan, C.H., Sin, J.K.O., Fung, S.K.H. and Cheung, P.W., "An automated precision gas sensor characterization system", *IEEE Region 10 International Conference on Microelectronics and VLSI*, Nov., pp.187-190, 1995.

12. Chai, C. and Thean O.,Using *LabVIEW* to Create Gas Sensor Characterization System, *National Instrument*.

13. Vasile, A., Setnic, S. and Buzoianu, E., "A dedicated data acquisition and monitor system for measuring the response time of gas sensors", *Proceedings of IEEE International Semiconductor Conference, CAS '98,* Vol. 2, Oct, pp. 627-630, 1998.

14. Merino, J.L., Casanova, R., Dieguez, A., Bota, S.A., Cane, C. and Samitier, J.,"A mixed-mode circuit for interface control and gas sensor resistance measurement", *Proceedings of the 20th IEEE Instrumentation and Measurement Technology Conference, IMTC'03,* Vol. 1, May, pp. 827-831, 2003.

15. Arshak, K., Moore, E., Lyons, G.M., Harris, J. and Clifford S, "A review of gas sensors employed in electronic nose applications", *Sensor Review*, Vol. 24, No. 2, pp. 181–198, 2004.

16. Gong, J., Non-silicon microfabricated nanostructured chemical sensors for electronic nose application, *University of Central Florida*, 2005.

17. Watson, J., "The Stannic Oxide Gas Sensor", *Sensor Review*, Vol. 14 No. 1, pp. 20-23, 1994.

18. http://www.appliedsensor.com/technologies/
Technology / Sensors / MOS, AppliedSensor Inc.

19. Deininger, D., Williams, S. and Kostelecky, C., "Solid state sensors for NO_x Detection", *The Instrumentation, Systems and Automation Society Presented*, ISA Expo, 2003.

20. Office of Air Quality Planning & Standards, How nitrogen oxides affect the way we live and breathe, *United States Environmental Protection Agency*, NC USA, 1998.

21. http://www.ec.gc.ca/cleanair-airpur/NOx-WS489FEE7D-1_En.htm

22. Air and Radiation, Progress report on the EPA acid rain program, United States, *Environmental Protection Agency (EPA)*, 1999.

23. Department for Environment, Food and Rural Affairs, Review of Environmental and Health Effects of Waste Management: *Municipal Solid Waste and Similar Wastes*, 2004.

24. Ivanov, P., Stankova, M., Llobet, E., Vilanova, X., Brezmes, J., Gracia, I., Cane, C., Calderer, J., Correig, X., "Nanoparticle metal-oxide films for micro-hotplate-based gas sensor systems", *IEEE Sensors Journal,* Vol. 5, Issue. 5, pp. 798-809, 2005.

25. DeBoer, J., Evaluation Methods for Porous Silicon Gas Sensors, *Georgia Institute of Technology*, 2004.

26. Ropkins, K., Ames, D.L. and Colvile, R.N., Final Report: Evaluation of Sensors to Provide Real-Time Air Quality Information for UTMC Systems, *UTMC Manchester England*, 2000.

27. Noboru Yamazoe, "Toward innovations of gas sensor technology", *Sensors and Actuators B 108*, pp.2–14, 2005.

28. Physics Tutorial: Linear Regression
http://phoenix.phys.clemson.edu/tutorials/regression/index.html

29. Lilienthal, A., Zell, A., Wandel, M. and Weimar, U., "Sensing odour sources in indoor environments without a constant airflow by a mobile robot", *Proceedings IEEE International Conference on Robotics and Automation (ICRA),* Vol. 4, pp. 4005-4010, 2001.

30. U. Varshney and S. Sneha, "Patient monitoring using ad hoc wireless network: reliability and power management", *IEEE Communications Magazine*, pp.49–55, April 2006.

31. American SIDS Institute

http://www.sids.org

32. National SIDS/Infant Death Resource Center

http://www.sidscenter.org

33. J. Bunker, M. Kejariwal and G. Monlux, "SIDS home monitor with telecommunications capabilities", *In Proc. of IEEE EMBS International Conference*, pp. 1060–1061, Oct 28-31, 1993.

34. T. Hoppenbrouwers, M. Neuman, M. Corwin, J. Silvestri, T. Baird, D. Crowell, C. Hunt, M. Sackner, G. Lister, M. Willinger and CHIME, "Multivariable cardiorespiratory monitoring at home: collaborative home infant monitoring evaluation (CHIME)", *In Proc. of IEEE EMBS International Conference*, Volume 1, pp. 61–62, Oct 31-Nov 3,1996.

35. S. Singh and H. Hsiao, "Internet based infant monitoring system", *In Proc. of the first Joint IEEE BMES/EMBS Conference*, Volume 2, page 674, Oct 13-16, 1999.

36. M. R. Neuman, H. Watson, R. S. Mendenhall, J. T. Zoldak, J. M. Di Fiore, M. Peucker, T. M. Baird, D. H. Crowell, T. T. Hoppenbrouwers, D. Hufford, C. E. Hunt, M. J. Corwin, L. R. Tinsley, D. E. Weese-Mayer, M. A. Sackner and the CHIME Study Group, "Cardiopulmonary monitoring at home: the CHIME monitor", *Physiological Measurement*, pp. 267–286, 2001.

37. P. Dickinson, K. Appiah, A. Hunter and S. Ormston, "An FPGA-based infant monitoring system", *In Proc. of IEEE International Conference on Field-Programmable Technology*, pp. 315–316, Dec 11-14, 2005.

38. W. W. Von Maltzahn and G. A. Miller, "Oxygen consumption monitor for infants", *In Proc. of IEEE EMBS International Conference*, pp. 856–857, Nov 3-6, 1994.

39. C. Linti, H. Horter, P. Osterreicher, and H. Planck, "Sensory baby vest for the monitoring of infants", *International Workshop on Wearable and Implantable Body Sensor Networks*, Apr 3-5, 2006.

40. The Engineering Toolbox

http://www.engineeringtoolbox.com

41. M. H. Nguyen, T. Takamori, S. Kobayashi, S. Takashima and A. Ikeuchi, "Development of carbon dioxide sensing system for searching victims in large scale disasters", *SICE 2004 Annual Conference*, Volume 2, pp. 1358–1361, Aug 4-6, 2004.

42. L.-C. Hsu, T. Ativanichayaphong, H. Cao, J. Sin, M. Graff, H. E. Stephanou and J.-C. Chiao, "Evaluation of Metal-oxide Based NO2 Sensors", *Sensor Review journal*, Apr 2007.

43. Figaro TGS4161 CO_2 sensor datasheet

http://www.figarosensor.com/products/4161pdf.pdf

44. U. Bilstrup and P.-A. Wiberg, "An architecture comparison between a wireless sensor network and an active RFID system", *Annual IEEE International Conference on Local Computer Networks*, pp. 583–584, Nov 16-18, 2004.

45. H. Cho, and Y. Baek, "Design and implementation of an active RFID system platform", *In Proc. of the International Symposium on Applications and the Internet Workshops*, Jan 23-27, 2005.

46. J. Waldrop, D. W. Engels and S. E. Sarma, "Colorwave: an anticollision algorithm for the reader collision problem", *IEEE International Conference on Communications*, Volume 2, pp. 1206-1210, May 11-15, 2003.

47. J. Ho, D. W. Engels and S. E. Sarma, "HiQ: a hierarchical Q-learning algorithm to solve the reader collision problem", *In Proc. of the International Symposium on Applications and the Internet Workshops*, Jan 23-27, 2006.

48. S. M. Birari and S. Iyer, "Mitigating the reader collision problem in RFID networks with mobile readers", *13th IEEE International Conference on Networks, Jointly held with the 2005 IEEE 7th Malaysia International Conference on Communication*, Nov 16-18, 2005.

49. S. L. Kin, L. N. Mun, and P. H. Cole, "The reader collision problem in RFID systems", *In Proc. of IEEE International Symposium on Microwave, Antenna, Propagation and EMC Technologies for Wireless Communications*, Volume 1, pp. 658–661, Aug 8-12, 2005.

50. Radiometrix wireless module datasheet

http://www.radiometrix.com

BIOGRAPHICAL INFORMATION

Hung Cao was born in Haiphong, Vietnam. He received his Bachelor degree in Electronics and Telecommunications from Hanoi University of Technology, Hanoi, Vietnam in 2003. He received his Master of Science in Electrical Engineering from The University of Texas at Arlington in August 2007. His research interests include MEMS, sensors and optics for biomedical applications.